Prüfbericht - Produkte
Test Report - Products

TÜVRheinland®

Prüfbericht-Nr.: *Test report no.:*	CN26W9UU 001	**Auftrags-Nr.:** *Order no.:*	326178369	Seite 1 von 125 *Page 1 of 125*
Kunden-Referenz-Nr.: *Client reference no.:*	2487803	**Auftragsdatum:** *Order date:*	2026-03-24	
Auftraggeber: *Client:*	NINGBO DEYE ESS TECHNOLOGY CO., LTD. No.568, South Rixian Road, Binhai Economic Development Zone, Cixi, Ningbo, Zhejiang, P.R.China			
Prüfgegenstand: *Test item:*	Rechargeable Li-ion Battery System			
Bezeichnung / Typ-Nr.: *Identification / Type no.:*	SE-F16 Max-6			
Auftrags-Inhalt: *Order content:*	TÜV Rheinland cTÜVus Mark Certificate			
Prüfgrundlage: *Test specification:*	ANSI/CAN/UL 1973:2022			
Wareneingangsdatum: *Date of sample receipt:*	2026-05-18			
Prüfmuster-Nr.: *Test sample no:*	3300N000E3270001-3300N000E3270005			
Prüfzeitraum: *Testing period:*	2026-05-19 - 2026-06-04			
Ort der Prüfung: *Place of testing:*	See page 4			
Prüflaboratorium: *Testing laboratory:*	TÜV Rheinland (Shanghai) Co., Ltd.			
Prüfergebnis*: *Test result*:*	Pass			

geprüft von:
created by: Anhui Wu, Feiyu Chen (Trainee)

Anhui Wu

Feiyu Chen

Datum:
Date: 2026-07-08

genehmigt von:
authorized by: Mino Yu

Mino Yu

Ausstellungsdatum:
Issue date: 2026-07-08

Stellung / Position: Sachverständige(r)/Expert

Stellung / Position: Sachverständige(r)/Expert

Sonstiges / *Other:* See the following pages for General product information and comment.

Zustand des Prüfgegenstandes bei Anlieferung: *Condition of the test item at delivery:* Prüfmuster vollständig und unbeschädigt *Test item complete and undamaged*

* Legende:	P(ass) = entspricht o.g. Prüfgrundlage(n)	F(ail) = entspricht nicht o.g. Prüfgrundlage(n)	N/A = nicht anwendbar	N/T = nicht getestet
** Legend:*	*P(ass) = passed a.m. test specification(s)*	*F(ail) = failed a.m. test specification(s)*	*N/A = not applicable*	*N/T = not tested*

Dieser Prüfbericht bezieht sich nur auf das o.g. Prüfmuster und darf ohne Genehmigung der Prüfstelle nicht auszugsweise vervielfältigt werden. Dieser Bericht berechtigt nicht zur Verwendung eines Prüfzeichens.
This test report only relates to the above mentioned test sample. Without permission of the test center this test report is not permitted to be duplicated in extracts. This test report does not entitle to carry any test mark.

Anmerkungen
Remarks

1	Alle eingesetzten Prüfmittel waren zum angegebenen Prüfzeitraum gemäß eines festgelegten Kalibrierungsprogramms unseres Prüfhauses kalibriert. Sie entsprechen den in den Prüfprogrammen hinterlegten Anforderungen. Die Rückverfolgbarkeit der eingesetzten Prüfmittel ist durch die Einhaltung der Regelungen unseres Managementsystems gegeben. Detaillierte Informationen bezüglich Prüfkonditionen, Prüfequipment und Messunsicherheiten sind im Prüflabor vorhanden und können auf Wunsch bereitgestellt werden. *The equipment used during the specified testing period was calibrated according to our test laboratory calibration program. The equipment fulfils the requirements included in the relevant standards. The traceability of the test equipment used is ensured by compliance with the regulations of our management system.* *Detailed information regarding test conditions, equipment and measurement uncertainty is available in the test laboratory and could be provided on request.*
2	Wie vertraglich vereinbart, wurde dieses Dokument nur digital unterzeichnet. Der TÜV Rheinland hat nicht überprüft, welche rechtlichen oder sonstigen diesbezüglichen Anforderungen für dieses Dokument gelten. Diese Überprüfung liegt in der Verantwortung des Benutzers dieses Dokuments. Auf Verlangen des Kunden kann der TÜV Rheinland die Gültigkeit der digitalen Signatur durch ein gesondertes Dokument bestätigen. Diese Anfrage ist an unseren Vertrieb zu richten. Eine Umweltgebühr für einen solchen zusätzlichen Service wird erhoben. Informationen zur Verifizierung der Authentizität unserer Dokumente erhalten Sie auf folgender Webseite: go.tuv.com/digital-signature *As contractually agreed, this document has been signed digitally only. TUV Rheinland has not verified and unable to verify which legal or other pertaining requirements are applicable for this document. Such verification is within the responsibility of the user of this document. Upon request by its client, TUV Rheinland can confirm the validity of the digital signature by a separate document. Such request shall be addressed to our Sales department. An environmental fee for such additional service will be charged. For information on verifying the authenticity of our documents, please visit the following website: go.tuv.com/digital-signature*
3	Prüfklausel mit der Note * wurden an qualifizierte Unterauftragnehmer vergeben und sind unter der jeweiligen Prüfklausel des Berichts beschrieben. Abweichungen von Prüfspezifikation(en) oder Kundenanforderungen sind in der jeweiligen Prüfklausel im Bericht aufgeführt. *Test clauses with remark of * are subcontracted to qualified subcontractors and descripted under the respective test clause in the report.* *Deviations of testing specification(s) or customer requirements are listed in specific test clause in the report.*
4	Die Entscheidungsregel für Konformitätserklärungen basierend auf numerischen Messergebnisen in diesem Prüfbericht basiert auf der "Null-Grenzwert-Regel" und der "Einfachen Akzeptanz" gemäß ILAC G8:2019 und IEC Guide 115:2021, es sei denn, in der auf Seite 1 dieses Berichts genannten angewandten Norm ist etwas anderes festgelegt oder vom Kunden gewünscht. Dies bedeutet, dass die Messunsicherheit nicht berücksichtigt wird und daher auch nicht im Prüfbericht angegeben wird. Zu weiteren Informationen bezueglich des Risikos durch diese Entscheidungsregel siehe ILAC G8:2019. *The decision rule for statements of conformity, based on numerical measurement results, in this test report is based on the "Zero Guard Band Rule" and "Simple Acceptance" in accordance with ILAC G8:2019 and IEC Guide 115:2021, unless otherwise specified in the applied standard mentioned on Page 1 of this report or requested by the customer. This means that measurement uncertainty is not taken in account and hence also not declared in the test report. For additional information to the resulting risk based of this decision rule please refer to ILAC G8:2019.*

Test Report issued under the responsibility of:

TÜVRheinland®

www.tuv.com

TEST REPORT

ANSI/CAN/UL 1973

Batteries for Use in Stationary and Motive Auxiliary Power Applications

Report reference No......:	CN26W9UU 001
Date of issue .....:	see cover page
Total number of pages.....:	see cover page
Testing Laboratory.....:	TÜV Rheinland (Shanghai) Co., Ltd.
Address.....:	No. 177, Lane 777, West Guangzhong Road, Jing'an District, Shanghai 200072, P. R. China
Manufacture's name .....:	NINGBO DEYE ESS TECHNOLOGY CO., LTD
Address.....:	No.568, South Rixian Road, Binhai Economic Development Zone, Cixi, Ningbo, Zhejiang, P.R. China
Test specification:	
Standard.....:	ANSI/CAN/UL 1973:2022
Test procedure .....:	cTÜVus mark approval
Non-standard test method……..:	N/A
Test Report Form No. .....:	UL1973D
Test Report Form(s) Originator ....:	TÜV Rheinland (Shanghai)
Master TRF.....:	Dated 2022-03
Test item description.....:	Rechargeable Li-ion Battery System
Trade Mark.....:	Deye
Model/Type reference .....:	See cover page
Ratings .....:	See copy of marking label and model list.

List of Attachments (including a total number of pages in each attachment):

- Attachment 1: Photo documentation. (7 pages)

Summary of testing:

Test items:

cl. 15	Overcharge Test
cl. 16	High Rate Charge
cl. 17	Short Circuit Test
cl. 18	Overload Under Discharge
cl. 19	Overdischarge Protection Test
cl. 20	Temperature and Operating Limits Check Test
cl. 21	Imbalanced Charging Test
cl. 22	Dielectric Voltage Withstand Test
cl. 23	Continuity Test
cl. 25	Working Voltage Measurements
cl. 27	Electromagnetic Immunity Tests
cl. 31	Static Force Test
cl. 32	Impact Test
cl. 33	Drop Impact Test
cl. 34	Wall Mount Fixture/Support Structure/Handle Test
cl. 39	Resistance to Moisture Test
cl. 40	Salt Fog Test
cl. 42	Single Cell Failure Design Tolerance

The DUT was complied with the requirements of ANSI/CAN/UL 1973:2022.

Test Location:

NINGBO DEYE ESS TECHNOLOGY CO., LTD

No.568, South Rixian Road, Binhai Economic Development Zone, Cixi, Ningbo, Zhejiang P.R. China

Copy of marking plate:

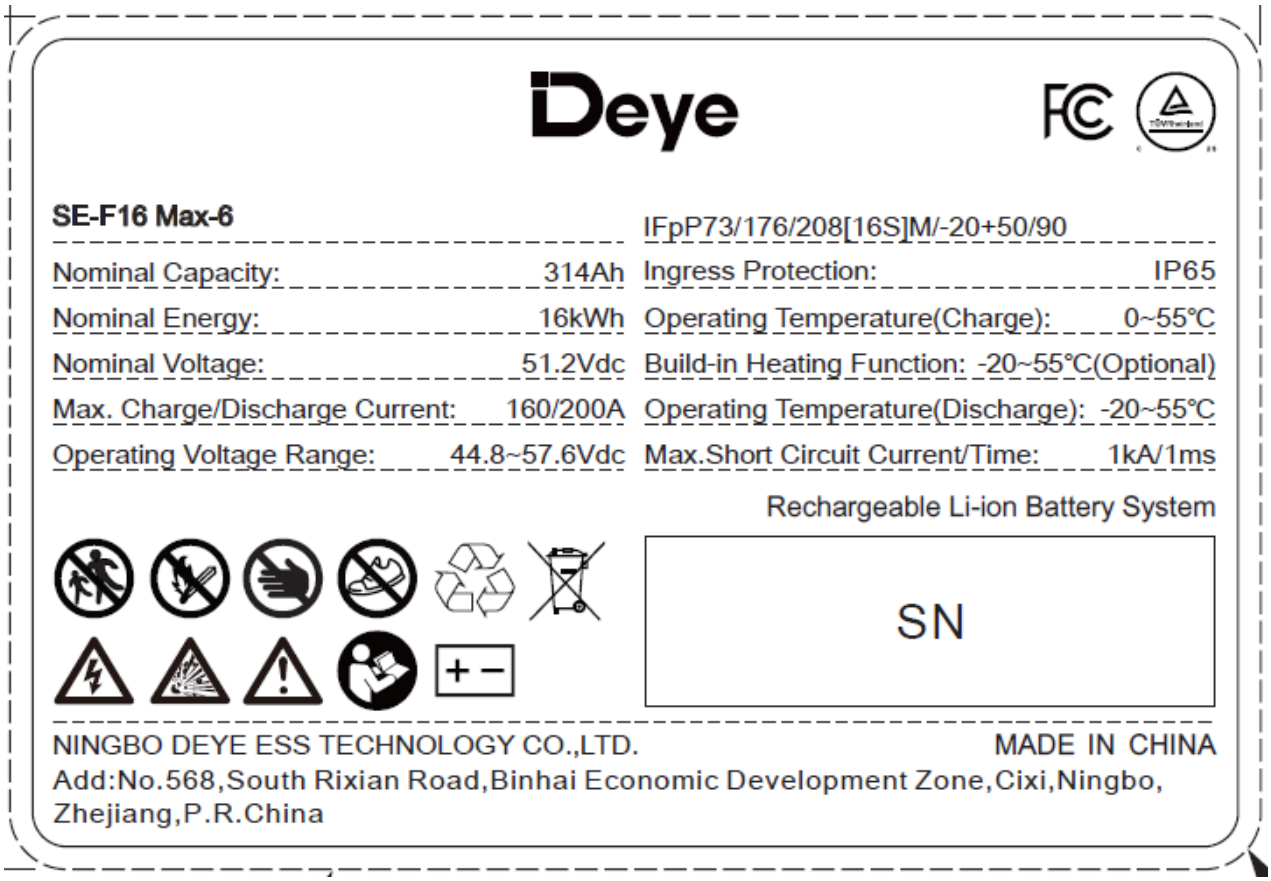

Note:

1. The 1st to 3rd digits of the SN code are 3 arbitrary digits, each digit ranges from 0 to 9, representing the product model code.

The 4th to 5th digits of the SN code are 2 arbitrary digits, each digit ranges from 0 to 9, representing the production line code.

The 6th to 8th digits of the SN code "XXXXXXXXXXXXXXXX" identify the battery cells used internally in the product. The specific encoding rules are shown in the table below:

The 6th to 8th digits of the SN code	Corresponding cell model
A01	GSP71173204F
A02	YPH3L7-314Ah
A03	MB31
A04	7VH4L4-314Ah
A05	PF173-314Ah

The 9th digital to 12th digital of SN number “XXXXXXXXXXXXXXXX"represents for production date, where the 9th digital represents production year, the 10th digital represents production month, and 11th and 12th represents production day. Specific coding rules are as shown in the table below.

Year	A for year 2022, B for year 2023, C for year 2024,..... Z for year 2047
Month	1 for January, 2 for February, ... , A for October, B for November, C for December
Day	Exact day, 01 to 31

The 13th to 16th digits of the SN code are 4 arbitrary digits, each digit ranges from 0 to 9, representing the production running number.

2. The battery cell model used internally in the SE-F16 Max-6 is YPH3L7-314Ah.

Caution:
-Prohibition short circuit.
-Don't discard the battery in fire or heater.
-Don't reverse the positive and negative terminals.
-Don't pierce the battery with a nail or other sharp object.
-Disposal acc. to local regulations!
-In the event of an emergency or problems with the system, please call Deye Services at 0086-0574-6378 7513

Attention :
- Interdiction de provoquer un court-circuit.
- Ne jetez pas la batterie dans le feu ou près d'un chauffage.
- Ne pas inverser les bornes positive et négative.
- Ne percez pas la batterie avec un clou ou tout autre objet pointu.
- Élimination conforme aux réglementations locales !
- En cas d'urgence ou de problèmes avec le système, veuillez appeler Deye Services au 0086-0574-6378 7513

WARNING

ARC FLASH HAZARD

Nominal system voltage:	57.6V
Arc flash boundary:	45cm
Available incident energy:	0.00043cal/cm^2
Working distance:	450mm
Minimum arc rating of clothing:	PPE1

ATTENTION

RISQUE D'ÉCLAIR D'ARC

Tension nominale du système:	57.6V
Limite de l'éclair d'arc:	45cm
Énergie incidente disponible:	0.00043cal/cm^2
Distance de travail:	450mm
Tenue à l'arc minimale des vêtements:	PPE1

Test item particulars:	
Information about the product needed to establish a correct test program, such as product mobility, type of power connections and similar.	(Test item particulars are selected by the TRF Originator base on the requirements in the standard)
Equipment application .....:	Stationary
Connection to the mains .....:	Permanent connection, not directly connected to the mains
Mains supply tolerance (%) or absolute mains supply values .....:	N/A
Cell/Battery Type.....:	Lithium-ion Cell Used
Battery Voltage Range.....:	See model list
Installation/Use environment .....:	Floor mount and wall mount installation/Indoor, outdoor
Overvoltage Category.....:	OVC II
Pollution Degree.....:	3 (outside), 2 (inside)
IP protection class .....:	IP65
Altitude of test laboratory (m).....:	Below 3000
Possible test case verdicts:	
Test case does not apply to the test object .....:	N(/A)
Test object does meet the requirement:	P(ass)
Test object does not meet the requirement .....:	F(ail)
Testing:	
Date of receipt of test item .....:	See cover page
Date(s) of performance of tests ....:	See cover page

General remarks:

This report shall not be reproduced, except in full, without the written approval of the testing laboratory. The test results presented in this report relate only to the object tested.

"(see remark #)" refers to a remark appended to the report.
"(see appended table)" refers to a table appended to the report.

Throughout this report a ☐ comma / ☒ point is used as the decimal separator.

Factory location:

NINGBO DEYE ESS TECHNOLOGY CO., LTD
No.568, South Rixian Road, Binhai Economic Development Zone, Cixi, Ningbo, Zhejiang, P.R. China

Description of the product:

General product information and other remarks:

Product Description:

1. SE-F16 Max-6 is a residential rechargeable Li-ion battery system of DEYE's SE-F series, with a specification of 51.2V, 16kWh. It is specially designed for high-capacity applications and long-term outdoor reliability.
2. SE-F16 Max-6 is constructed with YPH3L7-314Ah battery cells in 1P16S.
3. The battery system in a low voltage box has an over-charge, over-discharge, over-current, over-temperature, under-temperature, and short-circuit protection circuit.
4. The electronic circuits and software controls for the battery replied upon the protective functions of the battery management system which have been evaluated in accordance with UL 60730-1 Annex H.
5. SE-F16 Max-6 has two variants: US version and AU version, supplied for different target markets. The only difference between them lies in the plugs for wiring ports. Refer to the attached component list of this report.
6. SE-F16 Max-6 shall be used within a system equipped with a manual disconnect device that can isolate both positive and negative poles simultaneously.
7. The EUT is indoor or outdoor type with IP65 (battery system), PD2 was evaluated for inside and PD3 for outside.

Block diagram as below:

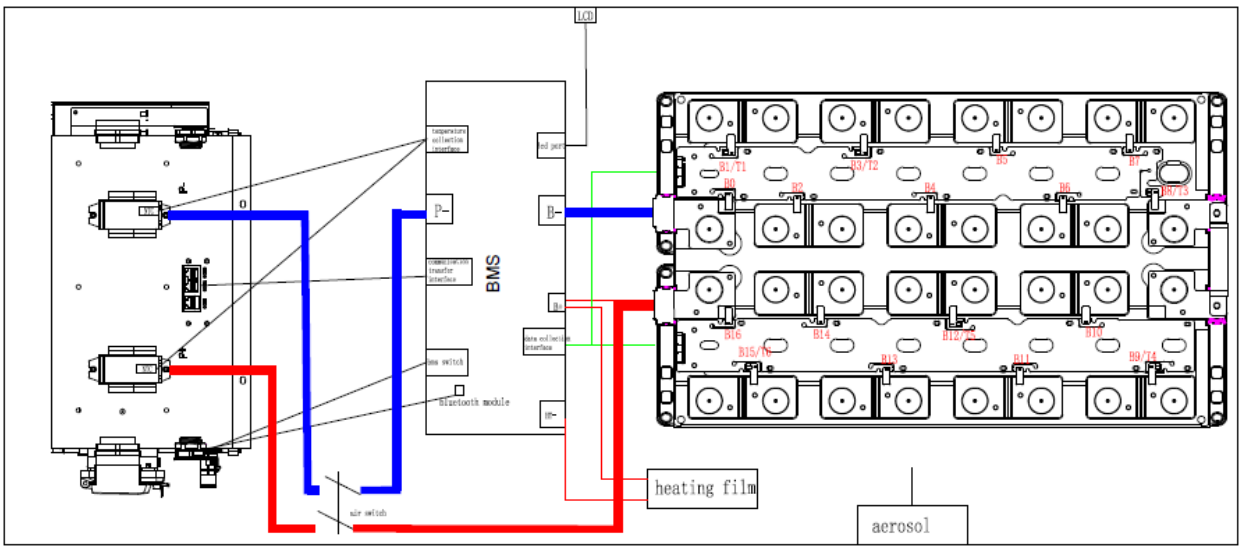

Block diagram of the system with heating film

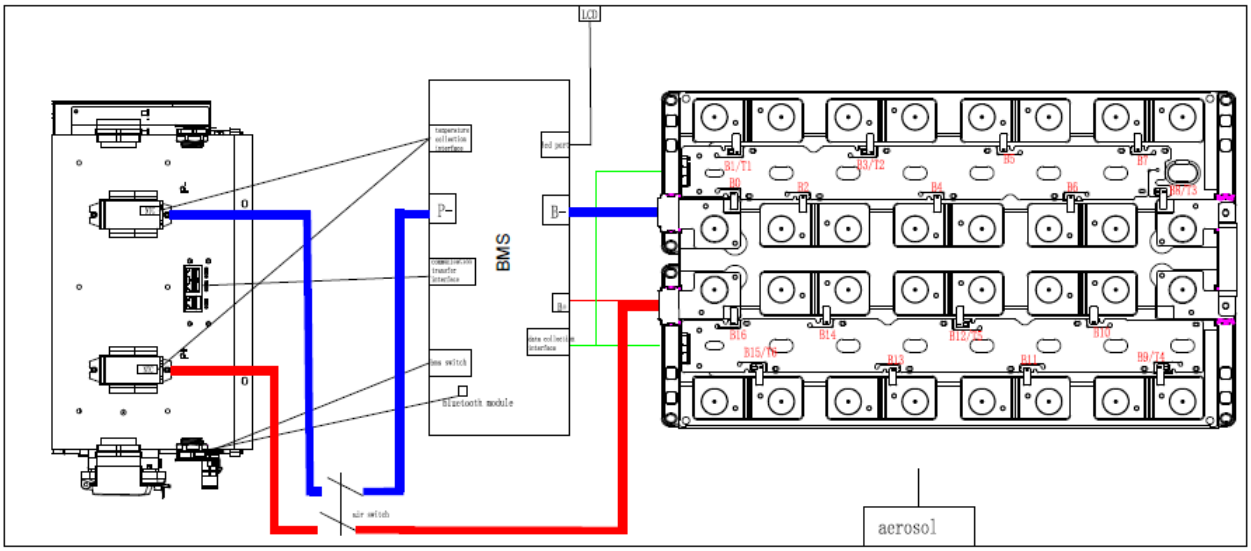

Block diagram of the system without heating film

Model list:

	Cell	Battery System
Product	Rechargeable Li-ion Cell	Rechargeable Li-ion Battery System
Type/model	YPH3L7-314Ah	SE-F16 Max-6
Cell Capacity [Ah]	314	314
Cell Quantity	1	16
Battery structure	--	1P16S
Nominal voltage [V]	3.2	51.2
Rated capacity [kWh]	1.0048	16
Upper limit charging voltage [V]	3.83	57.6
Recommend charging current [A]	157	157
Maximum charging current [A]	314	160
Recommend discharging current [A]	157	157
Maximum discharging current [A]	314	200
Discharge cut-off voltage [V]	2.5 (T ≥ 0°C) 2.0 (T < 0°C)	44.8
Temperature range for charging [°C]	-4 to 65	0 to 55 (without heating film) -20 to 55 (with heating film)
Temperature range for discharging [°C]	-30 to 65	-20 to 55
Temperature threshold for protection	--	60
Overcharge protected voltage supply by battery system	--	≥3.65V /Cell
Recommend charging method by manufacturer	Charge at constant current 157A until the voltage reaches 3.65V, then switch	At constant current 160A untill any cell voltage reaches 3.6V

	to constant voltage 3.65V till charge current drops to 15.7A	
Dimension [mm]	(71.7±0.5)*(174.7±0.8)*(207.0±0.8) T*W*H(mm) without terminal	464mm(W)×914mm(H) ×244.5mm(D)
Weight [kg]	5.57±0.15	118±2
Ingress Protection (IP)	--	IP65
Protective Class	--	I
Cooling type	--	Natural air cooling
Altitude	--	≤3000m

UL 1973			
Clause	Requirement + Test	Result - Remark	Verdict
INTRODUCTION			
1	**Scope**		**P**
2	**Components**		**P**
2.1	A component of a product covered by this standard shall comply with the requirements for that component. See Annex A for a list of standards covering components generally used in the products covered by this standard. A component shall comply with the CSA, UL, and/or ULC standards as appropriate for the country where the product is to be used.	See appended table Critical components.	P
3	**Units of Measurement**		**—**
4	**Undated References**		**—**
5	**Normative References**		**—**
6	**Glossary**		**—**
CONSTRUCTION			
7	**General**		**P**
7.1	Non-metallic materials		P
7.1.1	Polymeric materials employed for enclosures shall comply with the requirements as outlined in the Enclosure Requirements table, Table 4.1, Path III, of UL 746C except as modified by this standard. *Exception No. 1: Polymeric materials utilized for light electric rail (LER) enclosures for motive and VAP applications shall have a minimum flammability of V-1 or better, in accordance with UL 94 if intended for building into an enclosure or compartment within the train.* *Exception No. 2: LER enclosure parts for motive and VAP applications may alternatively be evaluated to the 20 mm end-product flame tests in accordance with UL 746C.*	Metal enclosure	N/A

UL 1973			
Clause	Requirement + Test	Result - Remark	Verdict
7.1.2	The factors taken into consideration when an enclosure is being judged are as follows. For a nonmetallic enclosure, all of these factors shall be considered with respect to thermal aging. Dimensional stability of a polymeric enclosure is addressed by compliance to the mold stress relief distortion test. a) Resistance to impact; b) Crush resistance; c) Abnormal operations; d) Severe conditions; and e) Mold-stress relief distortion.		N/A
7.1.3	The polymeric materials employed as enclosures and insulation shall be suitable for the anticipated temperatures encountered in the intended application. Pack enclosures shall have a Relative Thermal Index (RTI) with impact suitable for temperatures encountered in the application but no less than 80 °C (176 °F), as determined in accordance with UL 746B.		N/A
7.1.4	The pack enclosure materials intended to be exposed to sunlight in the end use application shall comply with the UV Resistance and the Water Exposure and Immersion tests in accordance with UL 746C.		N/A
7.1.5	Polymeric materials used as direct support for live parts other than those circuits determined nonhazardous (i.e. limited power circuits) shall comply with the insulation requirements of UL 746C. *Exception: Polymeric materials used as direct support for live parts that meet the requirements for "Safeguards Against Fire Under Normal Operating Conditions and Abnormal Operating Conditions," Clause 6.3, of UL 62368-1/CSA C22.2 No. 62368-1, or the requirements for "Safeguards Against Fire Under Single Fault Conditions," Clause 6.4, of UL 62368-1/CSA C22.2 No. 62368-1 are considered acceptable. Where specified in the reference document that components must meet the relevant IEC component standards, those components shall meet the applicable CSA or UL Standards.*		P
7.1.6	Polymeric tanks, piping and housings containing only electrolyte and sensors in flow batteries shall have a flammability rating of HB or better in accordance with UL 94.		N/A

UL 1973			
Clause	Requirement + Test	Result - Remark	Verdict
7.1.7	Printed wiring boards shall have a flammability rating of V-0 or V-1 in accordance with UL 94. *Exception: This requirement does not apply to printed wiring boards connected only in low-voltage, limitedenergy circuits (LVLE) where the deterioration or breakage of the bond between a conductor and the base material does not result in a risk of fire or electric shock.*		P
7.1.8	Gaskets and Seals relied upon for safety shall be determined suitable for the temperatures they are exposed to and other conditions of use. Compliance is determined by the applicable tests of UL 157.		P
7.2	Metallic parts resistance to corrosion		P
7.2.1	Metal pack enclosures shall be corrosion resistant. A suitable plating or coating process can achieve corrosion resistance. Additional guidance on methods to achieve corrosion protection can be found in UL 50E/C22.2 No. 94.2.	Corrosion resistant metal enclosure used.	P
7.2.2	Conductive parts in contact at terminals and connections shall not be subject to corrosion due to electrochemical action. Combinations above the line in Table D.1 of Annex D shall be avoided unless there is an evaluation that demonstrates that the potential for corrosion is negligible for the particular connection materials and design. See Annex D.		P
7.3	Enclosures		P
7.3.1	The enclosure of a battery system shall have the strength and rigidity required to resist the possible physical abuses that it will be exposed to during its intended use, in order to reduce the risk of fire or injury to persons. Compliance is determined by the tests of this standard.	Compliance checked by the tests. Also see clause 31, 32, 33 and 35.	P
7.3.2	A tool providing the mechanical advantage of a pliers, screwdriver, hacksaw, or similar tool, shall be the minimum mechanical capability required to open the enclosure.	Do not be opened without a tool.	P

UL 1973			
Clause	Requirement + Test	Result - Remark	Verdict
7.3.3	Openings in the enclosure shall be designed to prevent inadvertent access to hazardous parts. Compliance is determined by the Tests for Protection Against Access to Hazardous Parts Indicated by the First Characteristic Numeral, Clause 12 of IEC 60529 or CAN/CSA-C22.2 No. 60529, for a minimum IP rating of IP2X or IPXXB, and C22.1, the Enclosure Selection Table for Nonhazardous Locations, Table 65. (Evaluation per IEC 60529 or CAN/CSA-C22.2 No. 60529, Clause 12, consists of the use of the IEC articulate probe applied with a force of 10 N ±10 %). *Exception: For battery systems intended for location in restricted access locations only per 6.51, hazardous parts may be contacted with the articulate probe, but shall be located or guarded to prevent unintended contact by service or other trained personnel. Such equipment shall be provided with installation instructions in accordance with 45.3 and marked in accordance with 44.14.*	IP65	P
7.3.4	Openings in the enclosure shall be constructed to prevent accumulation of flammable gases that could lead to a hazardous condition from concentrations of hydrogen gas due to electrolysis of aqueous electrolytes for applicable battery technologies, such as vented or valve regulated lead acid and nickel batteries and applicable electrochemical capacitor technologies, greater than 25 % of the LFL of hydrogen (equivalent to 1 % concentration in a volume of air). Ventilation openings shall have a minimum opening area of: $A = 0.005NC_5(cm^2)$ Where: A = Total cross sectional area of ventilation holes required (cm^2) N = Number of cells in battery C_5 = Capacity of battery at the 5-h rate (Ah) *Exception: The area of ventilation openings can be reduced if it can be demonstrated that there is sufficient ventilation within the battery to prevent hydrogen accumulations above 25 % of the LFL of hydrogen.*	Lithium-ion battery technology used, where no hazards condition from concentrations of hydrogen gas occurs.	N/A

UL 1973			
Clause	Requirement + Test	Result - Remark	Verdict
7.3.5	Packs intended for installation where they may be exposed to moisture either through rain, splashing water or immersion shall be evaluated for their intended resistance to ingress of moisture in accordance with IEC 60529 or CAN/CSA-C22.2 No. 60529, or as outlined in NFPA 70, Article 110, or Section 2 of C22.1 for enclosure type designation and UL 50E/C22.2 No. 94.2, or NEMA 250. See also Section 39.	IP65	P
7.4	Wiring and terminals		P
7.4.1	General		P
7.4.1.1	Wiring shall be insulated and acceptable for the purpose, when considered with respect to temperature, voltage, and the conditions of service to which the wiring is likely to be subjected within the equipment.	See critical components table, also checked in test of section 20.	P
7.4.1.2	A wiring splice or connection shall be mechanically secure and shall provide electrical contact without strain on connections and terminals. Wiring shall be secured and routed away from sharp edges or parts exceeding insulation. Openings in compartments through which insulated wiring is routed shall be smooth and well-rounded or provided with protective insulating bushings or grommet to prevent abrasion. Wiring connections between various parts of a battery module/pack and accessories shall be routed and secured to prevent the potential for short circuit conditions to occur.	Wiring splice or connection checked	P
7.4.1.3	An uninsulated live part, including a terminal, shall be secured to its supporting surface by a method other than friction between surfaces so that it will be prevented from turning, shifting in position, or creating short circuit.	Terminal block was designed to prevent hazardous construction.	P
7.4.1.4	An external battery terminal shall be designed to prevent inadvertent shorting. An external terminal shall be designed to prevent inadvertent misalignment or disconnection when installed in its end use application.	Terminal block was designed to prevent hazardous construction.	P
7.4.1.5	External non-detachable cords and leads that are accessible in the end use installation shall be provided with strain relief that prevents strain to internal conductors under pull and push-back conditions. Compliance is determined by the tests of 26.4 and 26.5.	External non detachable cords or leads do not exist.	N/A
7.4.1.6	Plugs and receptacles shall be rated for the intended voltage, current, temperature, and if applicable, for disconnect under load conditions.	No such components.	N/A

UL 1973			
Clause	Requirement + Test	Result - Remark	Verdict
7.4.1.7	Battery system cables shall be rated for their anticipated service including voltage, current, temperature and environment. External cords for hazardous voltage circuits shall be jacketed to prevent wear to internal conductors and rated and provided with insulation suitable for the intended applications.	Checked and found eligible for their anticipated service.	P
7.4.1.8	In multiway plugs and sockets, and wherever shorting could otherwise occur, means shall be provided to prevent contact between parts in SELV circuits or parts at hazardous voltage due to loosening of a terminal or breaking of a wire at a termination. Compliance is checked by inspection, by measurement and, where necessary, by the following test. A force of 10 N (2.25 lbf) is applied to the conductor near its termination point. The conductor shall not break away or pivot on its terminal to the extent that spacings are reduced below the values specified in 7.5.	No such parts.	N/A
7.4.1.9	Wiring compartments and wiring terminals provided for connection of the battery system to external circuits shall be constructed as outlined below: a) A field wiring compartment in which supply connections are to be made shall be located so that the connections will be accessible for inspection after the unit is installed as intended. b) A knockout in a sheet-metal enclosure shall be secured and shall be removable without undue deformation of the enclosure. The knockout shall be surrounded by a flat surface to accommodate seating of a conduit bushing or locknut of the appropriate size. c) An outlet box, terminal box, wiring compartment, in which field connections are made shall be free from any sharp edges including screw threads, a burr, a fin or moving part of the like that may abrade the insulation on conductor or otherwise damage wiring. d) A field wiring terminal or lead shall be rated for the connection of a conductor or conductors having a minimum ampacity rating of 125% of the rating of the unit. e) The distance between the end of the connection point of a field installed wire and the wall of the enclosure toward which the wire is to be directed, shall be in accordance with Table 312.6 (A) or (B) of NFPA 70.		P
7.4.2	Beads and ceramic insulators	No such components	N/A

UL 1973			
Clause	Requirement + Test	Result - Remark	Verdict
7.4.2.1	Beads and similar ceramic insulators on conductors shall: a) Be so fixed or supported that they cannot change their position in such a way that a hazard would be created; and b) Not rest on sharp edges or sharp corners.		N/A
7.4.2.2	If beads are located inside flexible metal conduits, they shall be contained within an insulating sleeve, unless the conduit is mounted or secured in such a way that movement in normal use would not create a hazard. Compliance is checked by inspection and, where necessary, by the following test. A force of 10 N (2.25 lbf) is applied to the insulators or to the conduit. The resulting movement, if any, shall not create a hazard in the meaning of this standard.		N/A
7.5	Spacings and separation of circuits		P
7.5.1	General		P
7.5.1.1	Electrical circuits within the pack at opposite polarity shall be provided with reliable physical spacing to prevent inadvertent short circuits (i.e. electrical spacings on printed wiring boards, physical securing of un-insulated leads and parts, etc.). Insulation suitable for the anticipated temperatures and maximum voltages shall be used where spacings cannot be controlled by reliable physical separation.		P

UL 1973			
Clause	Requirement + Test	Result - Remark	Verdict
7.5.1.2	Electrical spacings in circuits shall be based upon the grade of insulation required as outlined in the Insulation Materials and Requirements, Clause 5.4 of UL 62368-1/CSA C22.2 No. 62368-1, and shall comply with Clearances, Clause 5.4.2, and Creepage Distances, Clause 5.4.3, of UL 62368-1/CSA C22.2 No. 62368-1. For the appropriate pollution degree of the intended environment see 7.5.2 and 7.5.3. *Exception No. 1: As an alternative to these spacing requirements, the spacing requirements in UL 840, may be used. For determination of clearances, a dc source such as a battery does not have an overvoltage category as outlined in the section for Components of UL 840 unless charged through an ac mains connected rectifier, then the overvoltage category should be the same as that required for the rectifier unless the rectifier uses galvanic isolation. If galvanic isolation is employed, then the overvoltage category can be reduced to the next lower overvoltage category. The anticipated pollution degree is determined by the design and application of the battery system or subassembly under evaluation.* *Exception No. 2: As an alternative to the clearance values outlined in UL 62368-1/ CSA C22.2 No. 62368-1 the alternative method for determining minimum clearances in the Annex for Alternative Method for Determining Clearances for Insulation in Circuits Connected to an AC Mains not Exceeding 420 V peak (300 V RMS), Annex X, of UL 62368-1/CSA C22.2 No. 62368-1 may be applied.* *Exception No. 3: As an alternative to these spacing requirements, the spacing requirements of Table 7.1 may be applied instead. When using this table, maximum working voltages of circuits can be determined through the test of Section 23. See the note in Table 7.1 regarding adjustment for spacings where double or reinforced insulation is required.* *Exception No. 4: As an alternative, clearances and creepage distances per IEC 60664-1 can be applied instead.*	The electrical spacings for clearance and creepage comply with UL 62368-1.	P
7.5.1.3	Conductors of circuits operating at different potentials shall be reliably separated from each other unless they are each provided with insulation acceptable for the highest potential involved.	Each circuit is separated from others.	P

UL 1973			
Clause	Requirement + Test	Result - Remark	Verdict
7.5.1.4	An insulated conductor shall be reliably retained so that it cannot contact an uninsulated live part of a circuit operating at a different potential. Some examples include clamping or routing of conductors, use of separating barriers of insulating material or other means that provides permanent separation of the parts.	Complied	P
7.5.1.5	There are no minimum spacings applicable to parts where insulating compound completely fills the casing of a compound or subassembly if the distance through the insulation, at voltages above SELV levels is a minimum of 0.4-mm (0.02-in) thick for supplementary or reinforced insulation, and passes the Dielectric Voltage Withstand Test. There is no minimum insulation thickness requirement for insulation of circuits at or below SELV levels for basic or functional insulation. Some examples include potting, encapsulation, and vacuum impregnation.	Complied	P
7.5.1.6	UL 840 shall not be used for clearances between an uninsulated live part and the walls of a metal enclosure, including fittings for conduit or armored cable. UL 840 shall not be used for the clearance and creepage distance at field wiring terminals		P
7.5.1.7	When determining the clearance for double or reinforced insulation in accordance with UL 840, the clearances of reinforced insulation shall be dimensioned corresponding to the rated impulse voltage, but choosing one step higher in the preferred series of values in the Minimum Clearances for Equipment table of UL 840 than that specified for basic insulation. If the impulse withstand voltage required for basic insulation, is other than a value taken from the preferred series, reinforced insulation shall be dimensioned to withstand 160 % of the impulse withstand voltage required for basic insulation.		P
7.5.1.8	When determining the creepage for double or reinforced insulation in accordance with UL 840, the creepage distances for reinforced insulation shall be twice the creepage distance required for the basic insulation as determined in UL 840.		P

UL 1973			
Clause	Requirement + Test	Result - Remark	Verdict
7.5.1.9	When determining the electrical spacing according to 7.5.1.1, a battery circuit that has no direct connection to a primary circuit and derives its power from a transformer or converter shall be considered a secondary circuit. The phase-to-ground rated system voltage used in the determination of mains transient voltage in UL 62368-1/CSA C22.2 No. 62368-1 or the rated impulse voltage in UL 840 shall be the rated supply voltage of the charging equipment for the battery.		P
7.5.1.10	For batteries intended for installation at high altitudes (i.e. 2000 m and above), see the Multiplication Factors for Clearances and Test Voltages table of UL 62368-1/CSA C22.2 No. 62368-1 or the Altitude Correction Factors for Clearance Correction table of IEC 60664-1 for multiplication factors to be applied to clearance values.		P
7.5.2	Overvoltage categories applied for electrical creepage and clearance determination		P
7.5.2.1	When determining the creepage and clearance requirements from 7.5.1.2, the overvoltage categories for the battery systems shall be determined based on how the batteries are connected to the supply mains. For equipment or circuits energized from the mains, four categories are considered: a) Category IV applies to equipment permanently connected at the origin of an installation (upstream of the main distribution board). Examples are electricity meters, primary overcurrent protection equipment and other equipment connected directly to outdoor open lines; b) Category III applies to equipment permanently connected in fixed installations (downstream of, and including, the main distribution board). Examples are switchgear and other equipment in an industrial installation; c) Category II applies to equipment not permanently connected to the fixed installation. Examples are appliances, portable tools and other plug-connected equipment; and d) Category I applies to equipment connected to a circuit where measures have been taken to reduce transient overvoltages to a low level.		P

UL 1973			
Clause	Requirement + Test	Result - Remark	Verdict
7.5.2.2	For stationary battery systems, Overvoltage Category III is applied. Overvoltage Category II may be applied for a stationary battery system that is isolated from an Overvoltage category III supply source (such as from an Overvoltage category III PCS) through an isolated transformer or protected in a manner that prevents transient overvoltage conditions. For vehicle auxiliary power batteries and on board LER batteries, Overvoltage Category II shall be applied.	OVC II considered Not end product.	P
7.5.3	Pollution degree for electrical creepage and clearance determination		P
7.5.3.1	With reference to 7.5.1.2, the following are conditions for determining the pollution degree to utilize when determining creepage and clearance distances. See also examples noted in Table 7.2. a) Pollution Degree 1 – No pollution or only dry, non-conductive pollution. Normally, this is achieved by having components and subassemblies adequately enclosed by enveloping or hermetic sealing so as to exclude dust and moisture. b) Pollution Degree 2 – Only non-conductive pollution that might temporarily become conductive due to occasional condensation. c) Pollution Degree 3 – Subject to conductive pollution, or to dry non-conductive pollution which could become conductive due to expected condensation. d) Pollution Degree 4 – Pollution that generates persistent conductivity through conductive dust or rain and snow.	PD3 (outside) PD2 (inside)	P
7.6	Insulation levels and protective grounding and bonding		P
7.6.1	Hazardous voltage circuits shall be insulated from accessible conductive parts and circuits as outlined in 7.6.2 through the following: a) Basic insulation and provided with a protective grounding system for protection in the event of a fault of the basic insulation; or b) A system of double or reinforced insulation; or c) A combination of (a) and (b).	Hazardous voltage circuits are insulated in accordance with c).	P
7.6.2	Safety extra low voltage (SELV) circuits as defined in 6.54 that are insulated from accessible conductive parts through functional insulation only are considered accessible.	Insulation checked for accessible part for SELV circuit.	P

UL 1973			
Clause	Requirement + Test	Result - Remark	Verdict
7.6.3	Batteries that rely upon protective grounding, shall comply with 7.6.4 – 7.6.9.	Complied with 7.6.4 through 7.6.9.	P
7.6.4	Accessible non-current carrying metal parts of a battery system with hazardous voltage circuits, that could become live in the event of an insulation fault, shall be bonded to the equipment ground terminal.	Grounding system exists.	P
7.6.5	Parts of the protective grounding system shall be reliably secured in accordance with 7.4.1.2 and provided with good metal-to-metal contact. All connections shall be secured against accidental loosening and shall ensure a thoroughly good connection. The resistance between the protective conductive terminal of 7.6.8 and the accessible non-current carrying conductive parts outlined in 7.6.2 shall not exceed 0.1 Ω.		P
7.6.6	With reference to 7.6.5, when connecting conductive parts to be bonded, paint or coatings in areas of contact shall be removed or paint piercing lock washers shall be used with securement bolts or screws to provide good metal to metal contact. Thread-locking sealants, epoxies, glues, or other similar compounds, and solder alone shall not be used as a securement means as these are not considered reliable. In addition, rivets, hinges (unless metal-to-metal piano type hinges), and parts that may be removed as a result of servicing shall not be relied upon as connections for ensuring continuity of the protective grounding and bonding system.	Complied.	P
7.6.7	With reference to 7.6.5, methods of securement considered reliable and ensuring good metal-to-metal contact can consist of the following methods: a) Terminal blocks; b) Pressure connectors, grounding lugs and similar grounding and bonding equipment connectors; c) Exothermic welding processes; d) Machine screw-type fasteners that engage not less than two threads or are secured with a nut; and e) Thread-forming machine screws that engage not less than two threads in the enclosure.	d), e)	P

UL 1973			
Clause	Requirement + Test	Result - Remark	Verdict
7.6.8	The main ground terminal of the protective grounding system shall be identified by one of the following: a) A green-colored, not readily removable terminal screw with a hexagonal head; b) A green-colored, hexagonal, not readily removable terminal nut; c) A green colored pressure wire connector; or d) The word “Ground” or the letters “G” or “GR” or the grounding symbol (IEC 60417, No. 5019) or otherwise identified by a distinctive green color.	The main ground terminal of the protective grounding system complies with d) grounding symbol.	P
7.6.9	Conductors, relied upon for the protective grounding and bonding system, shall be sized to handle intended fault currents and if insulated, the insulation shall be green or green and yellow striped in color. Grounding conductors shall be sized in accordance with Article 250.122 of NFPA 70 or Rule 10-810 of C22.1.	Grounding conductor color: green and yellow.	P
7.7	Transformers	No such parts.	N/A
7.7.1	Transformers shall be evaluated in accordance with UL 1562, UL 1310 or an equivalent standard for overload conditions, and shall have suitable insulation for the circuits they are connected to.		N/A
7.7.2	Transformers in low voltage circuits can alternatively be evaluated in accordance with 26.6.		N/A
7.7.3	Transformers shall be provided with overcurrent protection on the primary side of the transformer and sized in accordance with Article 450 of NFPA 70 or Section 26 of C22.1.		N/A
7.8	System safety analysis		P

UL 1973			
Clause	Requirement + Test	Result - Remark	Verdict
7.8.1	A safety analysis consisting of a hazard identification, risk analysis and risk evaluation shall be conducted on the device under test. This safety analysis shall determine which parts of the system are safety related through an existing methodology such as outlined 7.8.2. This approach should determine the hazard scenarios and define mitigation mechanisms. This safety analysis shall identify safety circuits or software that address each hazardous condition and consider the performance of each safety circuit or software. The following conditions in (a) – (c) shall be considered unless sufficient justification (e.g. additional safety analysis) is provided by the manufacturer that these conditions are not hazardous. The following conditions in (a) – (c) shall be considered at a minimum, but are not limited to: a) Battery cell over-voltage and under-voltage; b) Battery over-temperature and under-temperature; and c) Battery over-current during charge and discharge conditions.	Complied Evaluated according to UL 60730-1 Annex H.	P
7.8.2	Documents that can be used as guidance for the safety analysis include: a) IEC 60812; b) IEC 61025; c) MIL-STD-1629A; and d) IEC 61508, all parts.	Complied	P
7.8.3	The analysis of 7.8.1 is utilized to identify anticipated faults in the system which could lead to a hazardous condition and is validated by compliance with 7.9. The analysis shall consider the reliability of any monitoring components and systems and any communication systems providing information to the controls that can affect safety. The analysis shall consider single fault conditions in the protection circuit in addition to single faults elsewhere that could lead to a hazardous condition.	Complied	P
7.9	Protective circuit and controls		P

UL 1973			
Clause	Requirement + Test	Result - Remark	Verdict
7.9.1	Active protective devices shall not be relied upon for critical safety and shall comply with one of the following in (a) – (c) and comply with 7.9.2 and 7.9.3 as applicable. Refer to 6.49 and 6.50 for definitions of active and passive protective devices. a) They are provided with a redundant passive protective device; b) They are provided with redundant active protection that remains functional and energized upon loss of power to, or failure of the first level of active protection; or c) They remain fully operational or fail safe upon loss of power to, or under a single fault condition of the active circuit. *Exception : Active protective devices that comply with IEC 61508 (all parts), meeting minimum Safety Integrity Level (SIL) "2", ISO 13849 (all parts), meeting minimum performance level (PL) "c", or ISO 26262 (all parts), minimum of Automotive Safety Integrity Level (ASIL) "C" are permitted to be relied upon for critical safety. The SIL, PL, or ASIL for a safety function may be reduced if the manufacturer provides additional safety analysis, e.g. Layer of Protection Analysis (LOPA), showing that the required risk reduction level has been reduced by other measures used within the battery system.*		P
7.9.2	Active protective devices relied upon for safety as noted in 7.9.1, shall be evaluated in accordance with: a) The Failure-Mode and Effect Analysis (FMEA) requirements in UL 991 (Section 7); b) The Protection Against Internal Faults to Ensure Functional Safety requirements in UL 60730-1 or CAN/CSA E60730-1 (Clause H.27.1.2); or c) The Protection Against Faults to Ensure Functional Safety requirements (Class B requirements) in CSA C22.2 No. 0.8 (Section 5.5) to determine compliance and identify tests necessary to verify single fault tolerance.	Evaluated according to UL 60730-1 Annex H.	P

UL 1973			
Clause	Requirement + Test	Result - Remark	Verdict
7.9.3	With reference to 7.9.1, software relied upon for safety shall comply with: a) Software Class 1 requirements of UL 1998; b) Software Class B requirements of CSA C22.2 No. 0.8; or c) The Controls Using Software requirements (Software Class B requirements) in UL 60730-1 (Clause H.11.12) or CAN/CSA E60730-1.		P
7.9.4	Software and its associated hardware determined critical to safety that can be updated remotely shall meet the requirements outlined in UL 5500.	No such function	N/A
7.9.5	Battery systems shall be protected against all hazards identified in the safety system safety analysis of 7.8.		P
7.9.6	With reference to 7.9.5, if relied upon for maintaining the cells within their safe operating limits, the battery management system (BMS) shall maintain cells within the specified cell voltage and current limits to protect against overcharge and over-discharge. The BMS shall also maintain cells within the specified temperature limits providing protection from overheating and under temperature operation. When reviewing safety circuits to determine that cell operating region limits are maintained, tolerances of the protective circuit/component shall be considered in the evaluation. Components such as fuses, circuit breakers or other devices and parts determined necessary for safe operation of the battery system that are required to be provided in the end use installation, shall be identified in the installation instructions.		
7.9.7	With reference to 7.9.5 and 7.9.6, if safe operating limits are exceeded, a protective circuit shall limit or shut down the charging or discharging to prevent excursions beyond these limits. When a hazardous scenario occurs, as determined in 7.8.1, the system shall continue to provide the safety function or go to a safe state (SS) or risk addressed (RA) state. If the safety function has been damaged, the system shall remain in the safe state or risk addressed state until the safety function has been restored and the system has been deemed safe to operate.		P

UL 1973			
Clause	Requirement + Test	Result - Remark	Verdict
7.9.8	Solid state circuits and software controls, relied upon as the primary safety protection, shall be evaluated and tested to verify electromagnetic immunity in accordance with Section 27. *Exception: Solid state circuits and software need not comply if it can be demonstrated that the solid state circuits and software are not relied upon as the primary safety protection.*	Complied. Evaluated according to UL 60730-1 Annex H.	P
7.9.9	Battery systems with hazardous voltage circuits, including outputs of 60 V or greater, shall either be provided with a manual disconnect device or be provided with installation instructions for the disconnect device to be provided during installation of the system. The disconnect device shall be located as near as possible to the battery system terminals and it shall be rated for the application including disconnect under load if applicable. The disconnect device shall disconnect both poles of the circuit. The manual disconnect shall not require the use of a special tool or equipment to be operated. The disconnect device shall consist of either a manually operated switch or circuit breaker. *Exception No. 1: A battery system having either a plug or receptacle or connector for connection to the output circuit may be provided without an additional disconnect means. The plug, receptacle and connectors used for this purpose shall be investigated in accordance with UL 1682 and rated for current interruption suitable for the circuit. The required spacing to the hazardous voltage circuits shall be maintained when the plug or receptacle or connector is disconnected.* *Exception No. 2: A flow battery that can be turned off such that no circuits remain at hazardous voltage are not required to have a manual disconnect device.*	Complied	P
7.9.10	Fuses provided for battery overcurrent protection including short circuit protection shall be evaluated for both short circuit and overload conditions. Fuses that are evaluated for short circuit conditions only (type aR fuses), shall be provided with supplementary protection (e.g. the BMS) to ensure protection under overcurrent conditions in ranges below those covered by these types of fuses.		P
7.9.11	Protective components of battery modules intended for series connection in battery systems shall be rated for the maximum voltage of the intended battery system.		P
7.10	Cooling/thermal management system		N/A

UL 1973			
Clause	Requirement + Test	Result - Remark	Verdict
7.10.1	Battery systems that rely upon integral thermal management systems to prevent overheating shall be designed to shutdown upon failure of the thermal management system unless is can be demonstrated, that the thermal management system failure does not result in a hazardous situation. Compliance is determined by the Failure of the Cooling/Thermal Stability System Test of Section 24.		N/A
7.10.2	Piping, hose, and tubing used to contain liquid shall be resistant to chemical degradation from the liquid it contains, as well as other liquids reasonably likely to contact such parts during expected life of the equipment. It shall have the strength and material characteristics necessary to withstand the anticipated mechanical and environmental stresses. Compliance is determined as outlined in 7.11.1.		N/A
7.10.3	With reference to 7.10.2, piping containing fluids in accordance with the scope of ASME B31.3, shall comply with the applicable requirements of that code. ASME B31.3 applies to piping that contains toxic fluids, flammable fluids, fluids damaging to human tissue, and nonhazardous fluids at pressures greater than 15 psi (105 kPa) or temperatures lower than −29 °C (−20 °F) or greater than 186 °C (366 °F).		N/A
7.10.4	Piping, hose, and tubing containing liquids, shall be routed and secured to prevent leakage that could result in a fire, explosion or shock hazard.		N/A
7.10.5	Fans or blowers utilized for air-cooling systems shall comply with the applicable requirements in UL 507. *Exception: Fans located in SELV or ELV dc circuits need not be evaluated if shown to comply with the test of 26.1.*		N/A
7.10.6	Battery systems that rely on integral heaters to maintain operating temperatures of the battery system, shall be designed to shutdown upon failure of the heaters unless it can be demonstrated through fault analysis and if necessary an abnormal operation test, that the heater failure does not result in a hazardous situation.	No such parts	N/A

UL 1973			
Clause	Requirement + Test	Result - Remark	Verdict
7.10.7	Temperature controls for heaters used to maintain the operating temperature range of a battery system during cold ambient conditions shall be positioned such that they monitor the system temperature and are minimally affected by the outside ambient. For example, temperature controls or regulators should normally be located away from outside vents.	No such parts	N/A
7.11	Electrolyte containment parts and parts subject to pressure	No such parts	N/A
7.11.1	Parts that contain electrolyte, such as piping, hose, and tubing shall be resistant to chemical degradation from the electrolyte. Electrolyte containing parts shall have the strength and material characteristics necessary to withstand the anticipated mechanical and environmental stresses. Compliance is determined through review of material datasheets and where determined necessary, an immersion test (using the electrolyte as the test liquid) in accordance with the Volume Change Test after Immersion of UL 157 for elastomeric materials or the Test for Resistance of Polymeric Materials to Chemical Reagents in UL 746A for other than elastomeric materials, (same as ASMT D543, Test Method I), as applicable to the material and part being tested. Elastomeric parts in contact with electrolyte shall be subjected to the volume change and extraction test after 70-h immersion in the electrolyte in accordance with UL 157. The volume change shall be minus 1 to plus 25 % and extraction (change in weight) no greater than 10 %. Plastics other than elastomeric parts in contact with electrolyte shall be subjected to an immersion for 168 h at room temperature followed by a check for volume and weight change in accordance with ASTM D543, Procedure I method. The percentage of change of volume shall not be greater than 2 % of the original and the change in weight shall be no not increase more than 25 % or decrease more than 10 % of the original value. *Exception No. 1: See Annex C for material requirements for flowing electrolyte systems.* *Exception No. 2: Not applicable to individual cell or capacitor casings and materials that have been evaluated to appropriate component requirements per 7.12.*		N/A
7.11.2	Piping, hose, and tubing containing electrolyte, shall be routed and secured to prevent leakage that could result in a fire, explosion or shock hazard.		N/A

UL 1973			
Clause	Requirement + Test	Result - Remark	Verdict
7.11.3	Parts under pressure shall be acceptable for the maximum anticipated pressure as determined by the tests of Section 36. Exception: See Annex C for material requirements for flowing electrolyte systems.		N/A
7.11.4	Relief valves or rupture members relied upon to relieve overpressure conditions in a battery system shall operate in accordance with their specifications for start to discharge (i.e. pressure at which the relief valve or rupture membrane starts to relieve pressure). Compliance is determined by the tests of Section 37. This requirement does not apply to relief valves or rupture members integral to a cell or monobloc battery such as a VRLA type battery. *Exception: Relief valves and ruptures members stamped with the ASME approval mark for the particular device in accordance with the ASME Boiler and Pressure Vessel Code need not be subjected to the tests of Section 37.*		N/A
7.11.5	A pressure-relief device shall have its discharge opening located and directed so that operation of the device will not deposit moisture on bare live parts or on insulation or components that could be detrimentally affected by the discharge. It shall have a start to discharge (i.e. pressure at which the relief valve or rupture membrane starts to relieve pressure) rating adequate to relieve the pressure.		N/A
7.11.6	The fill port of the electrolyte containment of a monobloc system shall be designed to prevent overfill and spillage of electrolyte during the electrolyte filling.		N/A
7.11.7	Flow batteries shall be provided with a means for spill control such as a spill containment system to prevent electrolyte spills. The spill containment shall be sufficient to handle electrolyte spills for the size of the system. See Spill Containment Systems, Section C6, for means to determine compliance.		N/A
7.11.8	Flowing electrolyte batteries shall be provided with a means of leak detection that shall identify when a leak occurs in the system and initiate controls to mitigate the leak condition.		N/A
7.12	Cells (battery and electrochemical capacitor)		P

UL 1973			
Clause	Requirement + Test	Result - Remark	Verdict
7.12.1	Sealed nickel metal hydride cells shall comply with the cell tests of the Testing Required for Cells table of UL 2054 in addition to the requirements of this standard. Cells shall be provided with specifications for use (charging and discharging), installation, storage and disposal. *Exception No. 1: The overall dimensions of the projectile test aluminum test screen may be increased from those outlined in UL 2054 to accommodate large cells intended for stationary and LER applications, but the flat panels of the test screen shall not exceed a distance of 305 mm (12 in) from the cell in any direction.* *Exception No. 2: The overall external resistance for the short circuit test shall be less than or equal to 20 mΩ.* *Exception No. 3: The crush test shall be a bar crush test rather than a flat plate crush using a bar with a 15-cm (5.9-in) diameter if the flat plate crush test per UL 2054 is insufficient to create a crush condition in the cell as determined by (a) – (c) below. The force shall be applied until one of the following occurs:* *a) A voltage (OCV) drop of one-third of the original cell voltage occurs;* *b) A deformation of 15 % or more of initial cell dimension occurs; or* *c) A force of 1,000 times the weight of cell is reached.* *Exception No. 4: Nickel metal hydride or nickel cadmium cells that are sealed and formed as part of a monobloc battery, need only comply with the requirements of this standard as part of the assembled battery. If provided with a pressure release vent or flame arrester, the nickel battery shall comply with the requirements outlined in 7.12.8.* *Exception No. 5: Sample numbers tested for each test based upon UL 2054 test program may be reduced from 5 samples tested to 2 samples tested.* *Exception No. 6: During the heating test, the samples are held for 30 min at the maximum temperature rather than 10 min.*	Lithium-ion cells used.	N/A
7.12.2	Secondary lithium cells shall comply with the requirements outlined in Annex E, and be marked as required in 44.15 and 44.16. Cells shall be provided with specifications as outlined in 45.7.	The Lithium-ion cell has beentested and certified with standard UL1973: 2022.	P

UL 1973			
Clause	Requirement + Test	Result - Remark	Verdict
7.12.3	Secondary lithium cell design shall ensure sufficient safety measures to mitigate internal short circuits and other hazardous conditions during the life of the cells. Safety measures to maintain cell safety include, but are not limited to, the following: a) The appropriate choice and placement of insulation. IEEE 1625 and IEEE 1725 provide guidance on placement and application of insulation within cells and general cell design safety considerations; b) Sufficient sizing of the negative electrode active materials to cover the positive electrode active materials; c) Proper placement of insulation and separation of parts at opposite polarity including insulation and placement of tabs to prevent inadvertent short circuits during the life of the cell; d) The use of appropriate protection mechanisms such as separator shutdown, protective coatings and electrolyte additives, etc.; and e) The use of separators with sufficient strength, thermal properties and that are sized to prevent short circuit between the positive and negative electrodes during charge and discharge over the life of the cells.	Lithium-ion cells used.	P
7.12.4	With reference to 7.12.3, compliance to (a) – (e) is determined through a review of the cell construction as part of a tear down analysis, a review of documentation on the cell construction and components, and the cell tests of Annex E.		P
7.12.5	Sodium-beta cells and batteries shall comply with the cell tests outlined in Annex B. Cells shall be provided with specifications for use (charging and discharging), installation, storage and disposal.	Lithium-ion cells used.	N/A
7.12.6	Flowing electrolyte stacks and battery systems shall comply with the requirements outlined in Annex C.	Lithium-ion cells used.	N/A
7.12.7	With reference to 7.12.6, flowing electrolyte battery systems shall be designed to mitigate shunt currents. Imbalance conditions and the potential for corrosion of the electrolyte containment parts may occur as a result of excessive shunt currents in a flowing electrolyte battery system. The flowing electrolyte battery manufacturer shall demonstrate through analysis and data that shunt currents have been mitigated as a result of the system design.	Lithium-ion cells used.	N/A

UL 1973			
Clause	Requirement + Test	Result - Remark	Verdict
7.12.8	Batteries employing pressure release valves or flame arrestors shall comply with the pressure release test or the flame arrester test of UL 1989 in addition to the requirements of this standard. See Annex H for alternative criteria for vented or valve regulated lead acid or nickel cadmium batteries. Cells and multi-cell/monobloc batteries shall be provided with specifications for use (charging and discharging), installation, storage and disposal as outlined in Annex H.		N/A
7.12.9	Electrochemical capacitor cells and modules shall comply with the requirements outlined in UL 810A in addition to the requirements of this standard.	Lithium-ion cells used.	N/A
7.12.10	Sodium ion cells (e.g. Prussian Blue cells or transition metal layered oxide cells) shall comply with Annex E, and be marked as required in 44.15 and 44.16. Cells shall be provided with specifications as outlined in 45.7.	Lithium-ion cells used.	N/A
7.13	Repurposed cells and batteries		N/A
7.13.1	Batteries and battery systems using repurposed cells and batteries shall ensure that the repurposed parts have gone through an acceptable process for repurposing in accordance with UL 1974. See also 44.3.		N/A
PERFORMANCE			
8	**General**		**P**
8.1	Unless indicated otherwise the device under test (DUT) shall be at the maximum operational state of charge (MOSOC), in accordance with the manufacturer's specifications, for conducting the tests in this standard. After charging and prior to testing, the samples shall be allowed to rest for a maximum period of 8 h at room ambient. *Exception: For secondary lithium ion cells or batteries in which temperature is not a dependency on the test, the rest time may be extended to 36 h, but shall not be less than 90 % MOSOC.*	Complied	P

UL 1973			
Clause	Requirement + Test	Result - Remark	Verdict
8.2	Unless otherwise indicated, fresh samples (i.e. not more than 6 months old) representative of production shall be used for the system level tests described in Sections 15 – 42. The test program and number of samples to be used in each test is shown in Table 8.1. *Exception No. 1: At the agreement of the manufacturer, DUT samples may be re-used for more than one test if not damaged in a manner that would affect test results. Minor repairs can be made to samples such as replacement of fuses, etc. in order to reuse samples for multiple tests.* *Exception No. 2: For repurposed batteries and battery systems, the "repurposing manufacturing date" is the date of manufacture used to determine the 6 month threshold.*	Test conducted with fresh sample (within 6 months)	P
8.3	All tests, unless noted otherwise, are conducted in a room ambient 25 ±5 °C (77 ±9 °F). Tests shall be conducted with the DUTs heated to normal operating temperatures unless indicated otherwise in the test. For those tests that require the DUT to reach thermal equilibrium, thermal equilibrium is considered to be achieved if after three consecutive temperature measurements taken at intervals of 10 % of the previously elapsed duration of the test but not less than 15 min, indicate no change in temperature greater than ±2 °C (3.6 °F).	Unless otherwise specified, all tests conducted within a room ambient 25 °C ±5 °C (77±9°F).	P
8.4	Thermocouples shall be attached to the central component cell or module during the system level tests in Sections 15 – 42. Temperatures shall also be measured on any components affected by temperature in the control circuit during the tests of 9.1 and 9.2. Temperature shall be measured using thermocouples consisting of wires not larger than 24 AWG (0.21 mm^2) and not smaller than 30 AWG (0.05 mm^2) connected to a potentiometer-type instrument. Temperature measurements shall be made with the measuring junction of the thermocouple held tightly against the component/location being measured.		P
8.5	Unless noted otherwise in the individual test methods, the tests shall be followed by a 1-h observation time prior to concluding the test and temperatures shall be monitored in accordance with 10.2.		P
9	**Determination of Potential for Fire Hazard**		**P**

UL 1973			
Clause	Requirement + Test	Result - Remark	Verdict
9.1	In addition to visible signs of fire, non-compliant test results for fire shall also include an evaluation for combustible vapor concentrations during testing if there is the potential for combustible vapor concentrations based upon the technology and design of the battery system. For detection of potential combustible vapor concentrations that may be emitted during testing, a gas monitor suitable for detecting 25 % of the lower flammability limit (LFL) of the evolved gases being measured. A minimum of two sampling locations where concentrations may occur such as at vent openings or vent ducts shall be used for taking measurements. *Exception: As an alternative to using gas detection measurement to determine if there are combustible vapor concentrations, non-compliant tests results for fire may include an evaluation for potential combustible vapor concentrations with the use of a minimum of two continuous spark sources. The continuous spark sources shall provide at least two sparks per second with sufficient energy to ignite natural gas and shall be located near anticipated sources of vapor such as vent openings or at the vent duct.*	No visible signs of fire, flammable concentrations of vapours during test.	P
9.2	Additional precautions shall be taken during tests requiring this analysis due to the potential for combustible vapor concentrations that may occur within the test room or chamber.		P
10	**Important Test Considerations**		**P**

UL 1973			
Clause	Requirement + Test	Result - Remark	Verdict
10.1	The tests contained in this standard may result in explosions, fire and emissions of combustible and/or toxic vapors, leakage of hazardous chemicals as well as electric shock. It is important that personnel use extreme caution when conducting any of these tests and that they be protected from flying fragments, leaked electrolyte, explosive force, toxic vapors and chemicals and sudden release of heat and noise that could result from testing. To prevent injury, protective equipment and clothing should be utilized when handling batteries and when conducting testing. Short-circuiting can lead to very hazardous currents, and large format batteries may still be hazardous even in an uncharged condition. The test area shall be well ventilated to protect personnel from possible harmful vapors or gases and care should be taken to prevent exposure to leaked electrolyte. Test facilities shall be equipped to contain, mitigate, and exhaust toxic vapors and particulate matter, leaked electrolyte and other hazardous substances that may be generated during the tests of this standard including the External Fire Exposure Test of Section 41. See also 9.2.	Considered in Test Procedure.	P
10.2	As an additional precaution, the temperatures on surfaces of the DUT shall be monitored during the tests per 8.5. All personnel involved in the testing of battery systems shall be instructed to never approach the DUT until temperatures are falling and are at safe levels.	The temperatures were monitored.	P
11	**Single Fault Conditions**		**P**
11.1	Where there is a specific reference to a single fault condition in the individual test methods, the single fault shall consist of a single failure (i.e. open, short or other failure means) of any component in the electrical energy storage system that could occur as identified in the system safety analysis of 7.8 and that could affect the results of the test.	Evaluated for functional safety criteria considering single fault conditions in accordance with 7.8	P
12	**Test Results**		**P**
12.1	Tests that result in one or more of the following conditions as noted in Table 12.1 and as defined in Section 6, shall be considered as non-compliant for the test. Additional details of passing results criteria are provided in the individual test methods.		P

UL 1973			
Clause	Requirement + Test	Result - Remark	Verdict
12.2	For the following tests, if the DUT is still operational after the test (a user replaceable fuse may be replaced or user resettable device such as an accessible circuit breaker, etc. reset), it shall be subjected to a minimum single charge/discharge cycle in accordance with the manufacturer's specifications. No noncompliant results as outlined in Table 12.1 shall occur during the charge/discharge cycle of a still operational DUT. a) Overcharge; b) Short Circuit; c) Overdischarge Protection; d) Imbalanced Charging; e) Failure of Cooling/Thermal Stability System; f) Electrostatic Discharge; g) Radio-Frequency Electromagnetic Field; h) Fast Transient/Burst Immunity; i) Surge Immunity; j) Radio-Frequency Common Mode; k) Power Frequency Magnetic Field; l) Operational Verification; m) Vibration; n) Shock; o) Impact or Drop Impact; p) Static Force; q) Thermal Cycling; r) Salt Fog; and s) Resistance to Moisture. NOTE: If the tests of (f) – (l) may be done on the battery management system only and not the whole battery system.	Observed as per the standard	P
13	**Determination of Toxic Emissions**		**P**

UL 1973			
Clause	Requirement + Test	Result - Remark	Verdict
13.1	For those systems for which venting from cells or capacitors could result in the emission of toxic gases as determined by an analysis of the outgassed substances, the concentration of toxic gases during the destructive testing noted in Table 12.1 shall be monitored using one of the sampling methods noted below and as outlined in 13.2. Analysis of the outgassed substances can be obtained through review of MSDS sheets and/or analysis of the outgassed substances. If it can be determined through examination of the cells after testing that they did not vent as a result of the test, the system is in compliance with these criteria. a) ASTM D4490; b) ASTM D4599; c) OSHA Evaluation Guidelines for Air Sampling Methods Utilizing Spectroscopic Analysis; or d) NIOSH Manual of Analytic Methods.	No vent of the cell occurred as a result of the test.	P
13.2	To determine the concentration of toxic emissions, testing shall be conducted in a closed test chamber of known volume large enough to contain the DUT. Results obtained from continuous sampling the emissions during testing shall be scaled to estimate the anticipated exposure and concentration of toxic materials within either the passenger compartment of a light electric rail (LER) or the anticipated smallest room in which the system can be installed. For walk-in units, continuous monitoring shall also be conducted in the interior of the system enclosure. The results for stationary applications shall be further scaled to consider a 0.5 air changes per hour (ACH) ventilation rate. The 0.5 ACH represents allowable low ventilation rated for construction. *Exception: Stationary systems intended for installation outdoors only and that are not walk-in units are exempted from this monitoring. Stationary systems and systems for LER applications are also exempted from these requirements if provided with a ventilation system or otherwise designed to prevent exposure to toxic vapor releases and vents vapors to a safe location.*	No vent of the cell occurred as a result of the test.	P
14	**Measurement Equipment Accuracy**		**P**

UL 1973			
Clause	Requirement + Test	Result - Remark	Verdict
14.1	Unless noted otherwise in the test methods, the overall accuracy of measured values of test specifications or results when conducting testing in accordance with this standard, shall be within the following values of the measurement range: a) ±1 % for voltage; b) ±3 % for current; c) ±4 % for watts; d) ±2 °C (±3.6 °F) for temperatures at or below 200 °C (392 °F), and ±3 % for temperatures above 200 °C (392 °F); e) ±0.1 % for time; f) ±1 % for dimension; g) ±3 % for Ah; h) ±4 % for Wh.		P
ELECTRICAL TESTS			
15	**Overcharge Test**		**P**
15.1	The purpose of this test is to evaluate a battery system's ability to withstand an overcharge condition.		P
15.2	A fully discharged DUT (i.e. discharged to the manufacturer's specified EODV) shall be subjected to an overcharge resulting from a single fault condition in the charging protection/control circuit of the system that could lead to an overcharge condition. See Section 11 for a description of a single fault condition. Single fault conditions can be applied to both passive and active protective devices. During test, the voltage of the cells shall be measured. The test supply equipment used for charging the DUT shall be sufficient to create an overcharge of the DUT to at least 110 % of the maximum specified charging voltage. The charging rate used shall be the manufacturer's specified maximum charging rate. *Exception No. 1: Overcharge testing on a subassembly may be conducted instead of the complete battery* *system if determined to be representative of the battery system.* *Exception No. 2: Components in circuits evaluated for reliability (i.e. evaluated for functional safety in accordance with 7.9) need not be subjected to single fault conditions.*	Test conducted with 110 % of the maximum specified charging voltage. Single fault condition not applied, it was considered in cl. 7.8 and 7.9. Tested at minimum subassembly battery system. See appended table 15.	P

UL 1973			
Clause	Requirement + Test	Result - Remark	Verdict
15.3	The test shall continue until ultimate results occur followed by an observation period per 8.5. Ultimate results are considered to have occurred when one of the following occurs: a) The sample charging is terminated by the protective circuitry whether it is due to voltage or temperature controls or if the DUT reaches 110 % of its maximum specified charging voltage limit. Exceeding the manufacturer's specified charging limit is considered a non-compliant result. The DUT is monitored per 8.5 and 10.2; or b) Battery system failure occurs as evidenced by explosion, fire or other identifiable non-compliant results per Table 12.1.	a)	P
15.4	During the test, detection methods as outlined in Section 9 shall be used to detect the presence of combustible vapor concentrations if determined necessary. If required based upon system design or installation, venting of toxic releases shall be continuously monitored during the testing per Section 13.	No venting, leakage and rupture of the internal cell occurred.	P
15.5	If the DUT is operational after the overcharge test it shall be subjected to a discharge and charging cycle in accordance with the manufacturer's specifications. See 12.2 for details regarding user resettable devices. An observation period per 8.5 is then conducted.	Operational and cycled, No non-compliant result.	P
15.6	At the conclusion of the observation period, the samples shall be subjected to an "as received" dielectric voltage withstand test in accordance with Section 22. The DUT shall be examined for signs of rupture and evidence of leakage.	No rupture and no leakage after Dielectric Voltage Withstand Test.	P

UL 1973			
Clause	Requirement + Test	Result - Remark	Verdict
15.7	As a result of the overcharge test, the maximum charging voltage measured on the cells or modules shall not exceed their normal operating region. Also, the following in (a) – (h) are considered noncompliant results. For additional information on non-complying results refer to Table 12.1. a) E – Explosion; b) F – Fire; c) C – Combustible vapor concentrations; d) V – Toxic vapor release; e) S – Electric shock hazard (dielectric breakdown); f) L– Leakage (external to enclosure of DUT); g) R – Rupture (of DUT enclosure exposing hazardous parts as determined by 7.3.3); h) P – Loss of protection controls.	No non-compliant result	P
16	**High Rate Charge**		P
16.1	The purpose of this test is to evaluate a battery system's ability to protect against a high rate charge condition at currents over the battery maximum charging current specification.		P
16.2	A fully discharged DUT (i.e. discharged to the manufacturer's specified EODV) shall be subjected to a high rate charge. There shall be a single fault condition on overcurrent charge protection devices or controls unless they have been evaluated for reliability (i.e. evaluated for functional safety in accordance with 7.9). During the test, the current and voltage of the cells shall be measured. The test supply equipment used for charging the DUT shall be sufficient to provide a current that is 20 % greater than the maximum specified charging rate for the batteries. *Exception: High rate charge testing on a subassembly may be conducted instead of the complete battery system if determined to be representative of the battery system.*	Test conducted with 120 % of the maximum specified charging current. The teat was interrupted by current protective. Single fault condition not applied, it was considered in cl. 7.8 and 7.9. Tested on minimum subassembly battery system. See appended table 16.	P

UL 1973			
Clause	Requirement + Test	Result - Remark	Verdict
16.3	The high rate charging of the DUT shall continue until ultimate results occur followed by an observation period per 8.5. Ultimate results are considered to have occurred when one of the following occurs: a) The sample charging is terminated by the protective circuitry whether it is due to current, voltage or temperature controls. The DUT is monitored per 8.5 and 10.2; or b) Battery system failure occurs as evidenced by explosion, fire or other identifiable non-compliant results per Table 12.1.	Ultimate results a) observed.	P
16.4	During the test, detection methods as outlined in Section 9 shall be used to detect the presence of combustible vapor concentrations if determined necessary. If required based upon system design or installation, venting of toxic releases shall be continuously monitored during the testing per Section 13.		P
16.5	If the DUT is operational after the high rate charge test, it shall be subjected to a discharge and charging cycle in accordance with the manufacturer's specifications. See 12.2 for details regarding user resettable devices. An observation period per 8.5 is then conducted.		P
16.6	At the conclusion of the observation period, the samples shall be subjected to an "as received" dielectric voltage withstand test in accordance with Section 22. The DUT shall be examined for signs of rupture and evidence of leakage.	No rupture and no leakage after Dielectric Voltage Withstand Test.	P

UL 1973			
Clause	Requirement + Test	Result - Remark	Verdict
16.7	As a result of the high rate charge test, the battery protection circuit (e.g. BMS) shall detect the overcharging current and shall prevent the battery from being charged over the maximum battery charging current. The following in (a) – (h) are considered non-compliant results. For additional information on noncomplying results refer to Table 12.1. a) E – Explosion; b) F – Fire; c) C – Combustible vapor concentrations; d) V – Toxic vapor release; e) S – Electric shock hazard (dielectric breakdown); f) L – Leakage (external to enclosure of DUT); g) R – Rupture (of DUT enclosure exposing hazardous parts as determined by 7.3.3); h) P – Loss of protection controls.		P
17	**Short Circuit Test**		**P**
17.1	This test shall be conducted on a fully charged DUT (MOSOC per 8.1) with parallel connected cells or modules to determine its ability to withstand an external short circuit. DUTs with only series connections (i.e. no parallel connections of cells or modules) are tested at the cell or module level if determined to be equivalent to testing at the system level. *Exception: Short circuit testing on a subassembly may be conducted instead of the complete battery system if determined to be representative of the battery system.*	Testing on the complete battery system.	P
17.2	The sample shall be short-circuited by connecting the positive and negative terminals of the sample with a shorting device having resistance as low as practicable. In all cases the resistive circuit load shall have a maximum total resistance of 20 mΩ, as measured from the DUT terminals. For battery systems, the short circuit discharge profile at the terminals for current and time shall be recorded and compared with the manufacturer's specified value in 44.4.	< 20mΩ. See appended table Cl.17 for details.	P

UL 1973			
Clause	Requirement + Test	Result - Remark	Verdict
17.3	The direct short circuit test shall also be conducted on the battery module if it is intended to be installed or replaced in the field. The output of the battery module sample shall be short-circuited with a shorting device having resistance as low as practicable with a maximum total resistance of 20 mΩ.		P
17.4	Tests shall be conducted at room ambient. The samples shall reach thermal equilibrium temperature as outlined in 8.3 before the terminals are connected.	Tested at Room Ambient.	P
17.5	The sample shall be completely discharged (i.e. discharged until near zero state of charge/its energy is depleted), or protection in the circuit has operated and the temperature on the center module has peaked or reached a steady state condition and 7 h has elapsed, or a fire or explosion has occurred.	Protection in the circuit has operated.	P
17.6	During the test, samples supplied with protective devices shall be subjected to a single component fault using any single fault condition that may be determined to occur during discharge conditions. See Section 11 for details regarding single fault conditions. Single fault conditions can be applied to both passive and active protective devices. *Exception: Components in circuits evaluated for reliability (i.e. evaluated for functional safety criteria considering single fault conditions in accordance with 7.9) need not be subjected to single fault conditions.*	Single fault conditions have not applied due to Cl. 7.8 and 7.9 applied. See appended table Cl.17 for details.	P
17.7	During the test, a detection method as outlined in Section 9 shall be used to detect the presence of combustible vapor concentrations if determined necessary. If required based upon system design or installation, venting of toxic releases shall be continuously monitored during the testing per Section 13.	No venting, leakage and rupture of the internal cell had occurred.	P
17.8	If the DUT is operational after the short circuit test it shall be subjected to a charge and discharge cycle in accordance with the manufacturer's specifications. See 12.2 for details regarding user resettable devices. An observation period per 8.5 is then conducted.	Operational and cycled, No non-compliant result.	P
17.9	At the conclusion of the observation period , the samples shall be subjected to the "as received" dielectric voltage withstand test in accordance with Section 22. The DUT shall be examined for signs of rupture and evidence of leakage.	No rupture and no leakage after Dielectric Voltage Withstand Test.	P

UL 1973			
Clause	Requirement + Test	Result - Remark	Verdict
17.10	As a result of the short circuit test, the following in (a) – (h) are considered non-compliant results. For additional information on non-complying results refer to Table 12.1. a) E – Explosion; b) F – Fire; c) C – Combustible vapor concentrations; d) V – Toxic vapor release; e) S – Electric shock hazard (dielectric breakdown); f) L – Leakage (external to enclosure of DUT); g) R – Rupture (of DUT enclosure exposing hazardous parts as determined by 7.3.3); h) P – Loss of protection controls. *Exception: For modules that do not have integral short circuit protection controls, the compliance criteria is (a) and (b) above only.*	No non-compliant result	P
17.11	For battery systems, the measured maximum short circuit current and duration at that maximum value shall not be greater than the specified value of 44.4.		P
18	**Overload Under Discharge**		P
18.1	This test shall be conducted on a fully charged DUT (MOSOC per 8.1) with parallel connected cells or modules to determine its ability to withstand an overload discharge condition. DUTs with only series connections (i.e. no parallel connections of cells or modules) may be tested at the cell or module level if determined to be equivalent to testing at the system level. *Exception: Overload under discharge testing on a subassembly may be conducted instead of the complete battery system if determined to be representative of the battery system.*	Single fault condition not applied, it was considered in cl. 7.8 and 7.9. Tested on minimum subassembly battery system.	P
18.2	Condition 1 is the overload above the specified maximum discharge current of the battery, but below the BMS overcurrent protection (secondary protection) in accordance with 18.3 – 18.5.		P
18.3	With reference to 18.2, the positive and negative terminals of the DUT is to be connected to the external discharging equipment. The fully charged DUT shall then be discharged at a current equal to 90 % of the rated overcurrent protection value of the BMS (secondary protection).	Test conducted with 90 % of the rated overcurrent protection value of the BMS. See appended table 18.	P

UL 1973			
Clause	Requirement + Test	Result - Remark	Verdict
18.4	With reference to 18.2, the test shall be continued until: a) The DUT has been completely discharged (i.e. discharged until near zero state of charge/its energy is depleted); b) The protection in the circuit has operated and the temperature on the center cell/module has peaked or reached a steady state condition and 7 h has elapsed; or c) A fire or explosion has occurred. *Exception: The overload condition 1 can be waived if the maximum discharge current of the battery is equal to or higher than 90 % of the overcurrent protection value of the BMS (secondary protection).*		P
18.5	With reference to 18.2, during the test, samples supplied with protective devices in the discharge circuit shall be subjected to a single component fault using any single fault condition that may be determined to occur during discharge conditions. See Section 11 for details regarding single fault conditions. Single fault conditions can be applied to both passive and active protective devices. *Exception: Overcurrent protection components in circuits evaluated for reliability (i.e. evaluated for functional safety criteria considering single fault conditions in accordance with 7.9) need not be subjected to single fault conditions.*		P
18.6	Condition 2 is the overload above the BMS overcurrent protection, but below the primary overcurrent protection in accordance with 18.7 – 18.9.		P
18.7	With reference to 18.6, the positive and negative terminals of the DUT shall be connected to the external discharging equipment. The DUT shall then be discharged at a current equal to 135 % of the main fuse rating. *Exception No. 1: If the secondary overcurrent protection is a contactor, switch or similar disconnecting device, which has been investigated for an overload current higher than 135 % of the primary overcurrent protector rating, then the test shall be conducted at a discharge current of 150 % of the primary overcurrent protector rating.* *Exception No. 2: If the secondary overcurrent protection has be investigated for an overload current higher than 150 % of the primary overcurrent protector rating, then the condition 2 test can be waived.*	Test conducted with a current equal to 135 % of the main fuse rating. See appended table 18.	P

UL 1973			
Clause	Requirement + Test	Result - Remark	Verdict
18.8	With reference to 18.6, the test shall be continued until: a) The DUT has been completely discharged (i.e. discharged until near zero state of charge/its energy is depleted); b) The protection in the circuit has operated and the temperature on the center cell/module has peaked or reached a steady state condition and 7 h has elapsed; or c) A fire or explosion has occurred.		P
18.9	With reference to 18.6, during the test, samples supplied with protective devices in the discharge circuit shall be subjected to a single component fault using any single fault condition that may be determined to occur during discharge conditions. See Section 11 for details regarding single fault conditions. Single fault conditions can be applied to both passive and active protective devices. *Exception: Overcurrent protection components in circuits evaluated for reliability (i.e. evaluated for functional safety criteria considering single fault conditions in accordance with 7.9) need not be subjected to single fault conditions.*		P
18.10	During the test, a detection method as outlined in Section 9 shall be used to detect the presence of combustible vapor concentrations if determined necessary. If required based upon system design or installation, venting of toxic releases shall be continuously monitored during the testing per Section 13.	No venting, leakage and rupture of the internal cell occurred.	P
18.11	If the DUT is operational after the short circuit test, it shall be subjected to a charge and discharge cycle in accordance with the manufacturer's specifications. See 12.2 for details regarding user resettable devices. An observation period per 8.5 shall then be conducted.	Operational and cycled, No non-compliant result.	P
18.12	At the conclusion of the observation period, the samples shall be subjected to the "as received" dielectric voltage withstand test in accordance with Section 22. The DUT shall be examined for signs of rupture and evidence of leakage.	No rupture and no leakage after Dielectric Voltage Withstand Test.	P

UL 1973			
Clause	Requirement + Test	Result - Remark	Verdict
18.13	As a result of the overload test, the following in (a) – (h) are considered non-compliant results. For additional information on non-complying results refer to Table 12.1. a) E – Explosion; b) F – Fire; c) C – Combustible vapor concentrations; d) V – Toxic vapor release; e) S – Electric shock hazard (dielectric breakdown); f) L – Leakage (external to enclosure of DUT); g) R – Rupture (of DUT enclosure exposing hazardous parts as determined by 7.3.3); h) P – Loss of protection controls.		P
19	**Overdischarge Protection Test**		**P**
19.1	This test shall be conducted on a fully charged sample (MOSOC per 8.1) to determine the DUT's ability to withstand an overdischarge condition and is conducted with all discharge protection circuitry for both temperature and minimum voltage connected to prevent irreparable cell damage. During the test, active protective devices shall be subjected to single fault conditions, unless the protection circuit has been tested for functionality in accordance with 7.9. During test, the voltage of the cells shall be measured. *Exception: Overdischarge protection testing on a subassembly may be conducted instead of the complete battery system if determined to be representative of the battery system.*	See appended table Cl.19 for details.	P
19.2	The DUT shall be subjected to a constant discharging current/power that will discharge a battery at the manufacturer's specified maximum discharge rate. The test will continue until the passive protection device(s) are activated, or the minimum cell voltage/maximum temperature protection is activated, or the DUT has been discharged for an additional 30 min after it has reached its specified normal discharge limit, whichever comes first.	The minimum cell voltage protection is activated.	P

UL 1973			
Clause	Requirement + Test	Result - Remark	Verdict
19.3	During the test, a detection method as outlined in Section 9 shall be used to detect the presence of combustible vapor concentrations as determined necessary. If required based upon system design or installation, venting of toxic releases shall be continuously monitored during the testing per Section 13.	No venting, leakage and rupture of the internal cell had occurred.	P
19.4	If the DUT is operational after the overdischarge protection test it shall be subjected to a charge and discharge cycle in accordance with the manufacturer's specifications. See 12.2 for details regarding user resettable devices. An observation period per 8.5 is then conducted.	Operational and cycled, No non-compliant result.	P
19.5	At the conclusion of the observation period, the samples shall be subjected to the "as received" dielectric voltage withstand test in accordance with Section 22. The DUT shall be examined for signs of rupture and evidence of leakage.	No rupture and no leakage after Dielectric Voltage Withstand Test.	P
19.6	As a result of the overdischarge protection test, the minimum discharge voltage measured on the cells shall not exceed their normal operating range. Also, the following in (a) – (h) are considered noncompliant results. For additional information on non-complying results refer to Table 12.1. a) E – Explosion; b) F – Fire; c) C – Combustible vapor concentrations; d) V – Toxic vapor release; e) S – Electric shock hazard (dielectric breakdown); f) L – Leakage (external to enclosure of DUT); g) R – Rupture (of DUT enclosure exposing hazardous parts as determined by 7.3.3); h) P – Loss of protection controls.	No non-compliant result.	P
20	**Temperature and Operating Limits Check Test**		**P**

UL 1973			
Clause	Requirement + Test	Result - Remark	Verdict
20.1	This test is conducted to determine whether or not the cells/modules of the DUT are being maintained within their specified operating limits (including voltage and current at specified temperature) during maximum charge and discharge conditions. During this test, it shall also be determined as to whether or not temperature sensitive safety critical components are being maintained within their temperature ratings based upon the maximum operating temperature specifications of the DUT as well as a determination that temperatures on accessible surfaces are not exceeding safe limits. *Exception: Temperature and operating limits check test on a subassembly may be conducted instead of a complete battery system if determined to be representative of the battery system.*	Testing on the complete battery system.	P

UL 1973			
Clause	Requirement + Test	Result - Remark	Verdict
20.2	A fully discharged DUT (i.e. discharged to EODV) shall be conditioned within a chamber set to the upper limit charging temperature specifications of the DUT. After being stabilized at that temperature (refer to 8.3), the DUT shall be connected to a charging circuit input representative of anticipated maximum charging parameters. The DUT shall then be subjected to maximum normal charging while monitoring voltages and currents on modules until it reaches the manufacturer's specified fully charged condition. Temperatures shall be monitored on temperature sensitive components including cells. *Exception No. 1: If the DUT is unable to be tested in a chamber, it can be tested at an ambient temperature of 25 ±5°C (77 ±9°F). If tested at ambient temperatures during the test, the temperature measurement T shall not exceed:* $T \leq T_{max} - (T_{ma} - T_{amb})$ Where: T is the temperature of the given part measured under the prescribed test. T_{max} is the maximum temperature specified for compliance with the test. T_{amb} is the ambient temperature during the test. T_{ma} is the maximum ambient temperature permitted by the manufacturer's specification or 25 °C (77 °F), whichever is greater. *Exception No. 2: If the design of the DUT and its controls result in worse case normal charging conditions when testing at ambient (i.e. due to thermostats or other controls lowering the charge levels at elevated ambient), the test shall be conducted at ambient temperature of 25 ±5°C (77 ±9°F). Temperatures on temperature sensitive components shall not exceed T_{max}.*		P

UL 1973			
Clause	Requirement + Test	Result - Remark	Verdict
20.3	While still in the conditioning chamber, the chamber temperature shall be set to the upper limit discharging temperature specifications of the DUT if different from the charging temperature. The fully charged DUT (MOSOC per 6.1) shall then be discharged in accordance with the manufacturer's maximum rate of discharge down to the manufacturer's specified end of discharge condition while monitoring voltage and current on modules. Temperatures shall be monitored on temperature sensitive safety critical components including cells. Temperatures on accessible surfaces are also monitored. *Exception No. 1: If the DUT is unable to be tested in a chamber, it can be tested at an ambient temperature of 25 ±5°C (77 ±9°F). If tested at ambient temperatures during the test, the temperature measurement T shall not exceed:* $T \leq T_{max} - (T_{ma} - T_{amb})$ Where: T is the temperature of the given part measured under the prescribed test. T_{max} is the maximum temperature specified for compliance with the test. T_{amb} is the ambient temperature during the test. T_{ma} is the maximum ambient temperature permitted by the manufacturer's specification or 25 °C (77 °F), whichever is greater. *Exception No. 2: If the design of the DUT and its controls result in worse case normal discharging conditions when testing at ambient (i.e. due to thermostats or other controls lowering the discharge rate at elevated ambient), the test shall be conducted at ambient temperature of 25 ±5°C (77 ±9°F). Temperatures on temperature sensitive components shall not exceed T_{max}.*		P
20.4	The charge and discharge cycles are then repeated for a minimum of two complete cycles of charge and discharge. The DUT is then subjected to an observation period per 8.5.	Total 3 cycles applied.	P
20.5	At the conclusion of the observation period, the samples shall be subjected to the "as received" dielectric voltage withstand test in accordance with Section 22 if it anticipated that there has been deterioration of the insulation during the temperature test. The DUT shall be examined for signs of rupture and evidence of leakage.	No rupture and no leakage after Dielectric Voltage Withstand Test.	P

UL 1973			
Clause	Requirement + Test	Result - Remark	Verdict
20.6	The manufacturer's specified operating limits for cells/modules (voltage, current at specified temperatures) shall not be exceeded during the charging and discharging cycles. Temperatures measured on components shall not exceed their specifications. Temperatures measured on accessible surfaces shall not exceed allowed limits. See Table 20.1 and Table 20.2 for temperature limit tables. Additional non-compliant results during the temperature test are as noted below in (a) – (e). For additional information on non-complying results refer to Table 12.1. a) E – Explosion; b) F – Fire; c) C – Combustible vapor concentrations; d) V – Toxic vapor release; e) S – Electric shock hazard (dielectric breakdown); f) L – Leakage (external to enclosure of DUT); g) R – Rupture (of DUT enclosure exposing hazardous parts as determined by 7.3.3); and h) P – Loss of protection controls.	No non-compliant result.	P
21	**Imbalanced Charging Test**		**P**
21.1	This test is to determine whether or not a battery system with series connected cells/modules can maintain the cells/modules within their specified operating parameters if it becomes imbalanced. *Exception No. 1: Testing may be conducted at a subassembly level if that is representative of the battery system.* *Exception No. 2: Testing may be conducted on an alternate configuration if it can be shown to be representative for the battery system.*	Testing on complete system.	P
21.2	A fully charged DUT (MOSOC per 8.1) shall have all of its modules/cells with the exception of one discharged to its specified fully discharged condition. The undischarged module/cell shall be discharged to approximately 50 % of its specified state of charge (SOC) to create an imbalanced condition prior to charging.	Single fault condition not applied, it was considered in cl. 7.8 and 7.9.	P

UL 1973			
Clause	Requirement + Test	Result - Remark	Verdict
21.3	The sample shall then be charged in accordance with the manufacturer's maximum normal charging specifications. Charging shall continue until end of charge conditions and the DUT reaches thermal equilibrium. The voltage of the partially charged module/cell shall be monitored during the charging to determine if its voltage limits are being exceeded. During the test, active protective devices shall be subjected to single fault conditions, unless the protective circuit has been tested for functionality in accordance with 7.9.	See appended table Cl.21 for details.	P
21.4	During the test, a detection method as outlined in Section 9 shall be used to detect the presence of combustible vapor concentrations as determined necessary. If required based upon system design or installation, venting of toxic releases shall be continuously monitored during the testing per Section 13.	No venting, leakage and rupture of the cell had occurred.	P
21.5	If the DUT is operational after the test it shall be subjected to a discharge and charging cycle in accordance with the manufacturer's specifications. See 12.2 for details regarding user resettable devices. An observation period per 8.5 is then conducted.	Operational and cycled, No non-compliant result.	P
21.6	At the conclusion of the observation period, the DUT shall be subjected to an "as received" dielectric voltage withstand test in accordance with Section 22. The DUT shall be examined for signs of rupture and evidence of leakage.	No rupture and no leakage after Dielectric Voltage Withstand Test.	P
21.7	The maximum voltage limit of the module/cell shall not be exceeded when charging an imbalanced DUT. Also, the following in (a) – (h) are considered non-compliant results. For additional information on non-complying results refer to Table 12.1. a) E – Explosion; b) F – Fire; c) C – Combustible vapor concentrations; d) V – Toxic vapor release; e) S – Electric shock hazard (dielectric breakdown); f) L – Leakage (external to enclosure of DUT); g) R – Rupture (of DUT enclosure exposing hazardous parts as determined by 7.3.3); h) P – Loss of protection controls.	No non-compliant result.	P
22	**Dielectric Voltage Withstand Test**		**P**

UL 1973			
Clause	Requirement + Test	Result - Remark	Verdict
22.1	This test is an evaluation of the electrical spacings and insulation at hazardous voltage circuits within the battery system.		P
22.2	Circuits exceeding 42.4 V peak or 60 Vdc shall be subjected to an electric strength test in accordance with UL 62368-1/CSA C22.2 No. 62368-1, Clause 5.4.9. *Exception: Semiconductors or similar electronic components liable to be damaged by application of the test voltage may be bypassed or disconnected.*		P
22.3	The test voltage shall be applied between the hazardous voltage circuits of the DUT and noncurrent carrying conductive parts that may be accessible and low voltage circuits separated from hazardous voltage circuits by reinforced or double insulation.	See appended table Cl.22 for details.	P
22.4	The test voltage is also to be applied between the hazardous voltage charging circuit and the enclosure/accessible non-current carrying conductive parts of the DUT.	See appended table Cl.22 for details.	P
22.5	If the accessible parts of the DUT are covered with insulating material that may become live in the event of an insulation fault, then the test voltages are applied between each of the live parts and metal foil in contact with the accessible parts.	See appended table Cl.22 for details.	P
22.6	The test voltages shall be applied for a minimum of 1 min with the cells/modules disconnected to prevent charging during application of the voltage. Technologies that are required to be at an elevated operating temperature in order to be active, such as sodium-beta chemistries, shall be in a hot state prior to disconnection and applying the test potential.	See appended table Cl.22 for details.	P
22.7	The test voltages shall be applied for a minimum of 1 min between all the hazardous circuits of the battery and accessible parts or circuits. Technologies that are required to be at an elevated operating temperature in order to be active, such as sodium-beta chemistries, shall be in a hot state prior to disconnection and applying the test potential.		P

UL 1973			
Clause	Requirement + Test	Result - Remark	Verdict
22.8	If the battery system contains hygroscopic materials that may affect spacings, this test is repeated with the DUT or with the subassembly of the DUT containing the hygroscopic materials subjected to humidity conditioning of UL 62368-1/CSA C22.2 No. 62368-1, Clause 5.4.8. As a result of this testing, there shall be no dielectric breakdown as outlined in 22.7.	No such hygroscopic material.	N/A
23	**Continuity Test**		**P**
23.1	This test evaluates the continuity of the protective grounding and bonding system of the battery system that is intended to provide an electrically conductive path from the point of a ground fault on a battery system or its representative parts or components through normally non-current-carrying conductors, equipment, or the earth to the electrical supply source.		P
23.2	An alternate test method outlined in 23.7 may be used if the construction of the protective grounding and bonding system adheres to the construction methods outlined in 7.6.5 – 7.6.7. If the connections means vary from that outlined in 7.6.6 and 7.6.7, the fault current method outlined in 23.3 – 23.6 is the default method for evaluating the suitability of the protective grounding system.	The test method outlined in 23.7 was used.	P
23.3	The grounding system of an battery system shall have no more than 0.1 Ω resistance between any two parts of the system that are measured in accordance with the continuity test of 23.4 and 23.5.	See above	N/A
23.4	The voltage drop in a protective grounding system is measured after applying a test current of 200% of the rating of the overcurrent protection device rating, for a duration corresponding to 200% of the time-current characteristic of the overcurrent protection device. If the duration for 200% is not given, a point closest on the time-current characteristic shall be used. The overcurrent protective device limits the fault current in the protective grounding system, and is either provided in the battery system or external to the battery system and specified in the installation instructions. The supply used to provide the test current shall have a no load voltage not exceeding 60 Vdc.		N/A
23.5	The voltage drop measurement is made between any two conductive parts of the grounding system.		N/A

UL 1973			
Clause	Requirement + Test	Result - Remark	Verdict
23.6	The resistance shall be calculated from the measured voltage drop and current. The determined resistance shall be less than or equal to 0.1 Ω.		N/A
23.7	To check the continuity of the bonding connections, the resistance can be measured between two points on the bonding connections using a milli-ohmmeter. The measured resistance between any two bonding connections shall be less than or equal to 0.1 Ω.	See appended table Cl.23 for details.	P
24	**Failure of Cooling/Thermal Stability System**		N/A
24.1	The purpose of this test is to determine if the battery system can safely withstand a failure in the cooling/thermal stability system. *Exception: Testing may be conducted at a subassembly level if that is representative of the energy storage system.*		N/A
24.2	The DUT shall be fully discharged to the manufacturer's end of discharge condition EODV and then conditioned at maximum specified operating ambient for a period of 7 h or until thermally stable per 8.3, whichever is shorter. While still in the conditioning chamber, the DUT, with its cooling/thermal stability system disabled shall then be charged at its maximum specified charge rate until completely charged or until operation of a protective device.		N/A
24.3	The DUT shall be fully charged (MOSOC per 8.1) and then conditioned at maximum specified operating ambient for a period of 7 h or until thermally stable per 8.3, whichever is shorter. While still in the conditioning chamber, the DUT, with its cooling/thermal stability system disabled shall then be discharged at the maximum discharge rate until it reaches its specified end of discharge condition or until operation of a protective device.		N/A
24.4	During the test, one of the detection methods outlined in Section 9 shall be used to detect the presence of combustible vapor concentrations. If required based upon system design or installation, venting of toxic releases shall be continuously monitored during the testing per Section 13.		N/A
24.5	If the DUT is operational after the test it shall be subjected to a discharge and charging cycle in accordance with the manufacturer's specifications. See 12.2 for details regarding user resettable devices. An observation period per 8.5 is then conducted.		N/A

UL 1973			
Clause	Requirement + Test	Result - Remark	Verdict
24.6	At the conclusion of the observation period, the DUT shall be subjected to an “as received” dielectric voltage withstand test per Section 22. The DUT shall be examined for signs of rupture and evidence of leakage.		N/A
24.7	The test method of 24.2 – 24.6 shall be repeated with the DUT conditioned at the minimum specified operating ambient.		N/A
24.8	As a result of the failure of cooling/thermal stability test, the following in (a) – (h) are considered non-compliant results. For additional information on non-complying results refer to Table 12.1. a) E – Explosion; b) F – Fire; c) C – Combustible vapor concentrations; d) V – Toxic vapor release; e) S – Electric shock hazard (dielectric breakdown); f) L – Leakage (external to enclosure of DUT); g) R – Rupture (of DUT enclosure exposing hazardous parts as determined by 7.3.3); h) P – Loss of protection controls.		N/A
25	**Working Voltage Measurements**		**P**
25.1	This test is to measure the working voltage of a battery system.		P
25.2	The working voltage between live parts of opposite polarity, live and dead metal parts, live parts and a metal enclosure, and live and ground connections under both normal charging and discharging conditions as specified by the manufacture is measured.	See Table 25 for details.	P
25.3	The dead metal parts and metal enclosure shall be assumed to be connected to the negative terminal of the system for testing purpose.	See Table 25 for details.	P
25.4	The values obtained during the measurements outlined in 25.2 shall be used to verify electrical spacings criteria per 7.5.	See Table 25 for details.	P
26	**Tests on Electrical Components**		**N/A**
26.1	Locked-rotor test for low voltage dc fans/motors in secondary circuits		N/A

UL 1973			
Clause	Requirement + Test	Result - Remark	Verdict
26.1.1	The purpose of this test is to determine if a low voltage dc fan or motor does not present a hazard in a locked rotor condition. Fans complying with UL 507 are considered to comply with this requirement without test.	No such components.	N/A
26.1.2	A sample of the fan or motor is placed on a wooden board, which is covered with a single layer of tissue paper, and the sample in turn is covered with a single layer of bleached cotton cheesecloth of approximately 40 g/m^2.		N/A
26.1.3	The sample is then operated at the voltage used in its application and with its rotor locked for 7 h or until steady conditions are established per 8.3, whichever is the longer.		N/A
26.1.4	There shall be no ignition of the tissue paper or cheesecloth.		N/A
26.2	Input		N/A
26.2.1	The input current draw of a control or accessory separate from the pack such as a mains supplied control or an accessory control evaluated independent from a system, shall be subjected to the input test of 24.2.2.	No AC mains connected directly, charged with AC to DC isolated charger only.	N/A
26.2.2	The current or watts input to an ac mains supplied unit, when connected to an ac supply adjusted to the test voltage specified in Table 24.1 shall not be more than 110% of the rated/specified value. The current or watts input draw of a dc supplied unit, when connected to a dc supply, shall not exceed the rated/specified value of the device.		N/A
26.3	Leakage current		N/A
26.3.1	For separate controls or other accessories of the system that are cord connected and supplied by ac mains circuits, the controls shall comply with the Protective Touch Voltage, Touch Current and Protective Conductor Current test of UL 62368-1/CSA C22.2 No. 62368-1, Clause 5.7.	No AC mains connected directly, charged with AC to DC isolated charger only.	N/A
26.4	Strain relief test		N/A
26.4.1	The purpose of this test is to determine if the strain relief means for a non-detachable accessible cord prevents damage or displacement upon being pulled.	No external cords.	N/A

UL 1973			
Clause	Requirement + Test	Result - Remark	Verdict
26.4.2	The battery system or accessory provided with a strain relief shall withstand without damage to the cord or conductors and without displacement, a direct pull of 156 N (35 lbf) applied to the cord for 1 min. Supply connections within the equipment shall be disconnected from terminals or splices during the test when applicable. If the strain relief is mounted in a polymeric enclosure or part, the test is conducted after the mold stress test after the part has cooled to room temperature.		N/A
26.4.3	As a result of the pull force, there was no damage or displacement of internal connectors. Inner conductors may not elongate more than 2 mm (0.08 in) from the pre-test position.		N/A
26.5	Push-back relief test		N/A
26.5.1	The purpose of this test is to determine if the strain relief of a non-detachable accessible cord provides adequate protection to connections and prevent hazardous displacement of internal wiring and connections as a result of push back.	No external cords.	N/A
26.5.2	A product shall be tested in accordance with 24.5.3 and 24.5.4 without occurrence of any of the following conditions: a) Subjecting the supply cord to mechanical damage; b) Exposing the supply cord to a temperature higher than that for which it is rated; c) Reducing spacings (such as to a metal strain-relief clamp) below the minimum required values; or d) Damaging internal connections or components.		N/A
26.5.3	The supply cord shall be held 25.4 mm (1 in) from the point where the cord or lead emerges from the product and is then to be pushed back into the product. When a removable bushing, which extends further than 25.4 mm (1 in) is present, the bushing shall be removed prior to the test.		N/A
26.5.4	When the bushing is an integral part of the cord, then the test shall be carried out by holding the bushing. The cord shall be pushed back into the product in 25.4-mm (1-in) increments until the cord buckles or the force to push the cord into the product exceeds 26.7 N (6 lbf).		N/A
26.5.5	The supply cord shall be manipulated to determine compliance with 24.5.1.		N/A

UL 1973			
Clause	Requirement + Test	Result - Remark	Verdict
26.5.6	If the strain relief is mounted in a polymeric enclosure or part, the test is conducted after the mold stress test after the part has cooled to room temperature.		N/A
26.6	Low voltage transformer evaluation		N/A
26.6.1	The purpose of this test is to determine that transformers located in low voltage circuits (i.e. ≤ 60 Vdc) do not present a fire hazard under overload conditions. Transformers complying with UL 1310 or equivalent standard and evaluated under overload conditions are considered to comply with these requirements without further testing.	No such parts.	N/A
26.6.2	If the tests in this section are conducted under simulated conditions on the bench, these conditions shall include any protection device that would protect the transformer in the complete equipment. Tests shall be conducted under ambient laboratory conditions. A sample of the transformer is placed on a wooden board, which is covered with a single layer of tissue paper, and the sample in turn is covered with a single layer of bleached cotton cheesecloth of approximately 40 g/m^2 (1.18 oz/yd^2).		N/A
26.6.3	If a transformer has more than one secondary winding or a tapped secondary winding, separate tests shall be conducted for each winding, or each section of a tapped winding, with the other windings loaded or unloaded as may occur in service unless it can be determined that one condition will produce the most unfavorable results.		N/A
26.6.4	A resistive load that will draw three times the normal input current or maximum obtainable output current, whichever is less, shall be connected directly to the transformer secondary winding with the transformer connected to the voltage of the circuit the transformer will be installed in. The transformer shall be operated continuously: a) Until ultimate conditions are observed, including opening of a thermal cutoff or a similar device; b) For 7 h if temperatures stabilize or cycling of an automatically reset protector occurs; or c) For 50 cycles of resetting a manually reset protector.		N/A
26.6.5	As a result of the overload test, there shall be no emission of molten metal or fire as evidenced by burning or charring of the cheesecloth indicator or tissue paper.		N/A

UL 1973			
Clause	Requirement + Test	Result - Remark	Verdict
27	**Electromagnetic Immunity Tests**		**P**
27.1	General	Refer to the EMC test report No.: CN26MM9S 001	P
27.1.1	Active protective devices (e.g. battery management systems, solid state circuits, software controls, etc.) relied upon as the primary safety protection in 7.8 – 7.9 shall demonstrate sufficient immunity to electromagnetic interference by complying with the tests specified in 27.2 – 27.7. Alternate test procedures and levels specified in other standards may be used, but only if they are equivalent or more severe than the test procedures and levels specified below.		P
27.1.2	Each test shall begin with an operational DUT. The DUT may consist of only the battery management system, if that is the only part of the battery system that will be impacted.		P
27.1.3	During specific tests as indicated in 27.2 – 27.7, the DUT shall be subjected to a charge/discharge cycle in accordance with the manufacturer's specification. No non-compliant results as outlined in Table 12.1 shall occur during the charge/discharge cycle. *Exception: It is acceptable if the charge/discharge cycle is not completed at the conclusion of the test.*		P
27.1.4	After each test in 27.2 – 27.7, the DUT shall be inspected to verify that it is still operational and in compliance with Table 12.1. This may require Operational Verification (27.8) of the DUT if it is not possible to determine that it is fully operational by inspection. If the DUT is no longer operational, a failure analysis shall be conducted to determine the reason for the failure and to verify that the DUT has failed safely in accordance with Table 12.1. A DUT that is no longer operational shall not be used on any remaining test.		P
27.1.5	In addition, after all tests in this section have been completed, all samples used during the tests specified in 27.2 – 27.7 shall comply with the Operational Verification in 27.8.		P
27.2	Electrostatic discharge		P
27.2.1	The DUT shall demonstrate immunity to electrostatic discharges in accordance with the test procedure specified in IEC 61000-4-2.		P
27.2.2	The following test levels shall be used: a) ±6 kV contact discharge; and b) ±8 kV air discharge.		P

UL 1973			
Clause	Requirement + Test	Result - Remark	Verdict
27.2.3	After the test, the DUT shall comply with 27.1.4.		P
27.3	Radio-frequency electromagnetic field		P
27.3.1	The DUT shall demonstrate immunity to radio-frequency electromagnetic fields in accordance with the test procedure specified in IEC 61000-4-3.		P
27.3.2	The following test levels shall be used: a) 10 V/m from 80 MHz to 1 GHz, 1 kHz (80 % AM); and b) 3 V/m from 1.4 GHz to 6.0 GHz, 1 kHz (80 % AM).		P
27.3.3	During the test, the DUT shall comply with 27.1.3.		P
27.3.4	After the test, the DUT shall comply with 27.1.4.		P
27.4	Fast transient/burst immunity		P
27.4.1	The DUT shall demonstrate immunity to electrical fast transients/bursts in accordance with the test procedure specified in IEC 61000-4-4.		P
27.4.2	The following test levels in (a) – (c) shall be used. If the DUT has a DC power input port connected to an AC/DC converter such as a power supply or charger that is an integral part of the battery pack, the test shall be conducted on the AC input of the AC/DC converter using the test level specified in (c). Otherwise, the test shall be conducted on the DC power input port of the DUT using the test level specified in (b). a) On signal/control ports intended to be connected to cables longer than 3 m (118 in), ±1 kV (5/50 ns, 5 kHz); capacitive clamp shall be used; b) On input and output DC ports, ±1 kV (5/50 ns, 5 kHz); and c) On input and output AC ports, ±2 kV (5/50 ns, 5 kHz).		P
27.4.3	After the test, the DUT shall comply with 27.1.4.		P
27.5	Surge immunity		P
27.5.1	The DUT shall demonstrate immunity to surges in accordance with the test procedure specified in IEC 61000-4-5.		P

UL 1973			
Clause	Requirement + Test	Result - Remark	Verdict
27.5.2	The following test levels in (a) – (c) shall be used. If the DUT has a DC power input port connected to an AC/DC converter such as a power supply or charger that is an integral part of the battery pack, the test shall be conducted on the AC input of the AC/DC converter using the test level specified in (c). Otherwise, the test shall be conducted on the DC power input port of the DUT using the test level specified in (b). a) For I/O signal/control ports intended to be connected to long-distance cables longer than 30 m (98.4 ft), which leave the building, and/or are for outdoor use, ±1 kV line-to-ground; b) For input and output DC ports, ±0.5 kV line-to-line, and ±1 kV line-to-ground; and c) For input and output AC ports, ±1 kV line-to-line, and ±2 kV line-to-ground.		P
27.5.3	After the test, the DUT shall comply with 27.1.4.		P
27.6	Radio-frequency common mode		P
27.6.1	The DUT shall demonstrate immunity to radio-frequency conducted disturbances in accordance with the test procedure specified in IEC 61000-4-6.		P
27.6.2	The following test levels in (a) – (c) shall be used. If the DUT has a DC power input port connected to an AC/DC converter such as a power supply or charger that is an integral part of the battery pack, the test shall be conducted on the AC input of the AC/DC converter using the test level specified in (c). Otherwise, the test shall be conducted on the DC power input port of the DUT using the test level specified in (b). a) For I/O signal/control ports intended to be connected to cables longer than 3 m (118 in), 10 V (150 kHz to 80 MHz, 1 kHz, 80 % AM); b) For input and output DC ports, 10 V (150 kHz to 80 MHz, 1 kHz, 80 % AM); and c) For input and output AC ports, 10 V (150 kHz to 80 MHz, 1 kHz, 80 % AM).		P
27.6.3	During the test, the DUT shall comply with 27.1.3.		P
27.6.4	After the test, the DUT shall comply with 27.1.4.		P
27.7	Power-frequency magnetic field		P
27.7.1	The DUT shall demonstrate immunity to power-frequency magnetic fields in accordance with the test procedure specified in IEC 61000-4-8.		P
27.7.2	The test level of 10 A/m shall be used.		P

UL 1973			
Clause	Requirement + Test	Result - Remark	Verdict
27.7.3	During the test, the DUT shall comply with 27.1.3.		P
27.7.4	After the test, the DUT shall comply with 27.1.4.		P
27.8	Operational verification		P
27.8.1	After the tests in 27.2 – 27.7 have been completed, all samples used during these tests shall comply with the following.		P
27.8.2	The manufacturer shall declare the anticipated performance of all safety functions performed by active protective devices.		P
27.8.3	The manufacturer shall provide test procedures to verify that each of the safety functions performed by active protective devices is working correctly. This may include, for example, execution of a full charge/discharge cycle, or verification of correct safety function performance by simulation.		P
27.8.4	The test procedures specified in 27.8.3 shall be performed with each DUT in the following conditions: a) Fully-charged; and b) Fully-discharged.		P
27.8.5	During the test procedures specified in 27.8.3 – 27.8.4, each DUT shall exhibit one of the following behaviors: a) No loss of safety functions; or b) Transition to an appropriate state to ensure safe operation of the DUT. This could include a DUT that has lost its ability to charge or discharge as long as safety is maintained.		P
27.8.6	If redundant methods of protection are provided for a safety function to comply with 7.9.1, each method of protection shall be evaluated to determine if it functions as intended.		P
MECHANICAL TESTS			
28	**Vibration Test (LER Motive Applications and VAP Applications)**		**N/A**
28.1	The purpose of this test is to determine the battery system's resistance to anticipated vibration in LER motive and VAP installations and applies only to those systems intended for installation in these applications.		N/A

UL 1973			
Clause	Requirement + Test	Result - Remark	Verdict
28.2	The sample shall be secured to the testing machine by means of a rigid mount, which supports all mounting surfaces of the sample. *Exception: The sample may be mounted within a mounting fixture representative of the intended end use application.*		N/A
28.3	The fully charged sample (MOSOC per 8.1) shall be subjected to a vibration test in accordance with the Simulated Long Life Testing at Increased Random Vibration Levels Tests of IEC 61373, for the appropriate Category and Class of equipment as determined by the intended rail installation. (Category and Class of equipment is defined in IEC 61373.) *Exception: Batteries intended for VAP applications shall be subjected to the Vibration Endurance Test of UL/ULC 2271 or UL/ULC 2580.*		N/A
28.4	The DUT shall be subjected to vibration in 3 mutually perpendicular directions. During the test the OCV of the DUT and temperatures on the center cell/module shall be monitored for information purposes.		N/A
28.5	During the test, one of the detection methods outlined in Section 9 shall be used to detect the presence of combustible vapor concentrations. If required based upon system design or installation, venting of toxic releases shall be continuously monitored during the testing per Section 13.		N/A
28.6	If the DUT is operational after the test it shall be subjected to a discharge and charging cycle in accordance with the manufacturer's specifications. See 12.2 for details regarding user resettable devices. An observation period per 8.5 is then conducted.		N/A
28.7	At the conclusion of the observation period, the DUT shall be subjected to an "as received" dielectric voltage withstand test in accordance with Section 22. The DUT shall be examined for signs of rupture and evidence of leakage.		N/A

UL 1973			
Clause	Requirement + Test	Result - Remark	Verdict
28.8	As a result of the vibration test, the following in (a) – (h) are considered non-compliant results. For additional information on non-complying results refer to Table 12.1. a) E – Explosion; b) F – Fire; c) C – Combustible vapor concentrations; d) V – Toxic vapor release; e) S – Electric shock hazard (dielectric breakdown); f) L – Leakage (external to enclosure of DUT); g) R – Rupture (of DUT enclosure exposing hazardous parts as determined by 7.3.3); h) P – Loss of protection controls.		N/A
29	**Shock Test (LER Motive Applications and VAP Applications)**		**N/A**
29.1	The purpose of this test is to determine the battery system's resistance to anticipated shock in LER motive and VAP installations and applies only to those systems intended for installation in these applications.		N/A
29.2	The sample shall be secured to the testing machine by means of a rigid mount, which supports all mounting surfaces of the sample. During the test, temperatures on the center module are monitored for information purposes. Exception No. 1: This sample may be mounted within a mounting fixture representative of the intended end-use rail application. Exception No. 2: Batteries intended for VAP applications shall be subjected to the Shock Test of UL/ULC 2271 or UL/ULC 2580.		N/A
29.3	A fully charged sample (MOSOC per 8.1) shall be subjected to a shock test in accordance with IEC 61373 for the appropriate Category and Class of equipment as determined by the intended rail installation. (Category and Class of equipment is defined in IEC 61373.) *Exception: This test may be conducted at the module level if it can be shown that testing shall be representative of the battery system.*		N/A
29.4	Both positive and negative direction shocks shall be applied in each of 3 mutually perpendicular directions for a total of 18 shocks.		N/A

UL 1973			
Clause	Requirement + Test	Result - Remark	Verdict
29.5	During the test, one of the detection methods outlined in Section 9 shall be used to detect the presence of combustible vapor concentrations. If required based upon system design or installation, venting of toxic releases shall be continuously monitored during the testing per Section 13.		N/A
29.6	If the DUT is operational after the test it shall be subjected to a discharge and charging cycle in accordance with the manufacturer's specifications. An observation period per 8.5 is then conducted.		N/A
29.7	At the conclusion of the observation period, the DUT shall be subjected to an "as received" dielectric voltage withstand test in accordance with Section 22. The DUT shall be examined for signs of rupture and evidence of leakage.		N/A
29.8	As a result of the shock test, the following in (a) – (h) are considered non-compliant results. For additional information on non-complying results refer to Table 12.1. a) E – Explosion; b) F – Fire; c) C – Combustible vapor concentrations; d) V – Toxic vapor release; e) S – Electric shock hazard (dielectric breakdown); f) L – Leakage (external to enclosure of DUT); g) R – Rupture (of DUT enclosure exposing hazardous parts as determined by 7.3.3); h) P – Loss of protection controls.		N/A
30	**Crush Test (LER Motive Applications and VAP Applications)**		**N/A**
30.1	This test is conducted on a fully charged battery system intended for LER motive and VAP applications to determine its ability to withstand a crush that could occur during an accident and applies only to those systems intended for installation in these applications.		N/A

UL 1973			
Clause	Requirement + Test	Result - Remark	Verdict
30.2	A sample shall be crushed between a fixed surface and a ribbed test platen in accordance with the test fixture described in SAE J2464, with the following exceptions as noted below. Packs with 3 axes of symmetry, are subjected to 3 mutually perpendicular directions of press. A different sample of the DUT may be used for each crush. *Exception No. 1: The maximum force applied to the DUT shall be 100 ±6 kN.* *Exception No. 2: Battery systems with only 2 axes of symmetry, such as cylindrical designs are subjected to 2 mutually perpendicular directions of press.* *Exception No. 3: The DUT may be installed in a protective framework representative of what is provided in the end use application.* *Exception No. 4: A subassembly may be tested instead of a complete battery system if it can be demonstrated to be equivalent to testing a complete battery system.*		N/A
30.3	A detection method as outlined in Section 9 shall be used to detect the presence of combustible vapor concentrations within the sample. Venting of gases may occur, but shall not exceed ERPG-2 levels using the measurement methods outlined in Section 13. The sample shall be subjected to an observation period and the examined.		N/A
30.4	As a result of the crush test, the following in (a) – (d) are considered non-compliant results. For additional information on non-complying results refer to Table 12.1. a) E – Explosion; b) F – Fire; c) C – Combustible vapor concentrations; d) V – Toxic vapor release;		N/A
31	**Static Force Test**		**P**
31.1	The purpose of this test is to determine if the enclosure has sufficient strength to safely withstand a static force that may be applied to it.		P

UL 1973			
Clause	Requirement + Test	Result - Remark	Verdict
31.2	The enclosure of a fully charged DUT (MOSOC per 8.1) shall withstand a steady force of 250 N ±10 N for a period of 5 s, applied in turn to the top, bottom and sides of the enclosure fitted to the DUT, by means of a suitable test tool providing contact over a circular plane surface 30 mm (1.2 inch) in diameter. However, this test is not applied to the bottom of an enclosure having a mass of more than 18 kg (39.7 lbs). If the DUT is operational after completion of the application of the static force, it shall be subjected to a discharge and charging cycle in accordance with the manufacturer's specifications. An observation period per 8.5 is then conducted.		P
31.3	If deemed necessary (i.e. due to design of system and anticipation of venting of cells), one of the detection methods outlined in Section 9 shall be used to detect the presence of combustible vapor concentrations. If required based upon system design or installation, venting of toxic releases shall be continuously monitored during the testing per Section 13.		P
31.4	After the observation period, the DUT shall be subjected to an "as received" dielectric voltage withstand test in accordance with Section 22. The DUT shall be examined for signs of rupture and evidence of leakage.		P
31.5	As a result of the static force test, the following in (a) – (h) are considered non-compliant results. For additional information on non-complying results refer to Table 12.1. a) E – Explosion; b) F – Fire; c) C – Combustible vapor concentrations; d) V – Toxic vapor release; e) S – Electric shock hazard (dielectric breakdown); f) L – Leakage (external to enclosure of DUT); g) R – Rupture (of DUT enclosure exposing hazardous parts as determined by 7.3.3); h) P – Loss of protection controls.		P
32	**Impact Test**		**P**
32.1	The purpose of this test is to evaluate the mechanical integrity of the enclosure and its ability to provide mechanical protection to the battery system contents.		P

UL 1973			
Clause	Requirement + Test	Result - Remark	Verdict
32.2	A fully charged sample (MOSOC per 8.1) shall be subjected to a minimum of three impacts of 6.8 J (5 ft-lb) on any surface that can be exposed to a blow during intended use. The impact shall be produced by dropping a steel sphere, 50.8 mm (2 inches) in diameter, and weighing 535 g (1.18 lb) from a height, H, of 1.29 m (50.8 in). For surfaces other than the top of an enclosure, the steel sphere shall be suspended by a cord and swung as a pendulum, dropping through the vertical height of 1.29 m (50.8 in), with the product being impacted placed against a restraining vertical wall. See Figure 32.1. A different sample may be used for each impact.		P
32.3	If the DUT is operational after the impacts it shall be subjected to a discharge and charging cycle in accordance with the manufacturer's specifications. An observation period per 8.5 is then conducted.		P
32.4	During the test, one of the detection methods outlined in Section 9 shall be used to detect the presence of combustible vapor concentrations. If required based upon system design or installation, venting of toxic releases shall be continuously monitored during the testing per Section 13.		P
32.5	After the observation period, the DUT shall be subjected to an "as received" dielectric voltage withstand test in accordance with Section 22. The DUT shall be examined for signs of rupture and evidence of leakage.		P
32.6	As a result of the impact test, the following in (a) – (h) are considered non-compliant results. For additional information on non-complying results refer to Table 12.1. a) E – Explosion; b) F – Fire; c) C – Combustible vapor concentrations; d) V – Toxic vapor release; e) S – Electric shock hazard (dielectric breakdown); f) L – Leakage (external to enclosure of DUT); g) R – Rupture (of DUT enclosure exposing hazardous parts as determined by 7.3.3); h) P – Loss of protection controls.		P
33	**Drop Impact Test**		**P**

UL 1973			
Clause	Requirement + Test	Result - Remark	Verdict
33.1	Modules that are intended for field installation into rack mount or similar equipment are subjected to a drop impact test to determine that no hazard exists as a result of an inadvertent drop during installation or removal.		P
33.2	After being equilibrated at room temperature per 8.3, a fully charged module/component pack shall be dropped from a minimum height of 100 cm (39.4 in) for products weighing 7 kg (15.4 lbs) or less, 10 cm (3.9 in) for products weighing >7 kg (15.4 lbs), but less than 100 kg (220.5 lbs), and 2.5 cm (0.98 in) for products weighing > 100 kg (220.5 lbs), to strike a concrete or metal surface in the position most likely to produce adverse results and in a manner most representative of what would occur during maintenance and handling/removal of the battery system during installation and servicing. The orientation of the drop shall be determined by the testing personnel from an analysis of the installation and servicing instructions. If using a metal test surface, it should be provided with some manner of insulation such as insulating film that will prevent inadvertent short circuiting to the surface but will not affect test results.		P
33.3	The sample shall be dropped a minimum of one time. However, if only one drop test is performed, it shall not be a flat drop. If one drop test is a flat drop, then at least one other test shall be performed that is not a flat drop.		P
33.4	The concrete surface shall be at least 76-mm (3-in) thick and the concrete or metal drop surface shall be large enough in area to cover the DUT.		P
33.5	After the drop, if the DUT is operational it shall be subjected to a discharge and charging cycle in accordance with the manufacturer's specifications. An observation period per 8.5 is then conducted.		P
33.6	At the conclusion of the observation period, an "as received" dielectric voltage withstand test in accordance with Section 22. The DUT shall be examined for signs of rupture and evidence of leakage.		P
33.7	A spark ignition source or gas monitoring as outlined in Section 9 shall be used to detect the presence of combustible vapor concentrations within the sample immediately after the drop and repeated in the instance of increasing temperatures.		P

UL 1973			
Clause	Requirement + Test	Result - Remark	Verdict
33.8	As a result of the drop impact test, the following in (a) – (g) are considered non-compliant results. For additional information on non-complying results refer to Table 12.1. a) E – Explosion; b) F – Fire; c) C – Combustible vapor concentrations; d) S – Electric shock hazard (dielectric breakdown); e) L – Leakage (external to enclosure of DUT); f) R – Rupture (of DUT enclosure exposing hazardous parts as determined by 7.3.3); and g) P – Loss of protection controls.	No non-compliant result	P
34	**Wall Mount Fixture/Support Structure/Handle Test**		**P**
34.1	A wall mounting apparatus of a wall mounted battery system, a battery support structure such as a stationary battery system rack, the support structure for a flow batteries stack(s), or a handle(s) provided for handling of a field/rack installed module/pack, shall have sufficient strength to support the battery system or allow for carrying of module/pack. Compliance is determined by the test below. *Exception: This test can be waived for a battery rack complying with UL 2416 and rated for the intended weight of the batteries to be supported.*	Battery support structure was evaluated.	P
34.2	The wall mounting apparatus or other support structure and battery system shall be installed in accordance with the manufacturer's specifications. A force equal to three times the weight of the battery system is additionally applied to the center of the mounting apparatus or support structure in a downward direction. The force shall be held for 1 min. For modules/packs with a carrying handle(s), the DUT shall be supported by the carrying handles and a force equal to three times the weight of the DUT is additionally applied in a downward direction. If more than one carrying handle is provided, the added weight shall be distributed between the handles.		P

UL 1973			
Clause	Requirement + Test	Result - Remark	Verdict
34.3	As a result of the applied force, there shall be no damage to the mounting apparatus or support structure and the securement means when testing the wall mounting fixture or supporting structure. As a result of the applied force, there shall be no damage to handles or the handle mounting/securement means of the DUT.		P
35	**Mold Stress Test**		**N/A**
35.1	The purpose of this test is to determine if an enclosure made from molded polymeric material can withstand an accelerated aging test without compromising the safety of the enclosure.		N/A
35.2	One complete fully discharged sample (discharged to the manufacturer's specified EODV) shall be placed in a full-draft circulating-air oven maintained at a uniform temperature of at least 10°C (18°F) higher than the maximum temperature of the enclosure measured during the Temperature and Operating Limits Check Test in Section 20, but not less than 70°C (158°F). The sample shall remain in the oven for 7 h.		N/A
35.3	After removal from the oven the DUT shall be subjected to an observation period per 8.5. After the observation period, the sample shall be subjected to an "as received" dielectric voltage withstand test in accordance with Section 22. The DUT shall be examined for signs of rupture and evidence of leakage.		N/A
35.4	As a result of the mold stress conditioning, the sample shall show no evidence of mechanical damage, such as cracking of the enclosure exposing hazardous parts or reducing electrical spacings or leakage of electrolyte from the enclosure.		N/A
36	**Pressure Release Test**		**N/A**
36.1	The purpose of this test is to ensure that the resettable pressure relief valve operates to prevent damage to the battery system and its electrolyte containment. This test is applicable to valve regulated technologies such as valve regulated lead acid batteries and for nickel systems with resettable relief valves.	No such components.	N/A
36.2	A sample of the battery/cell shall be submerged in a container of mineral oil. For large batteries only the pressure relief valve needs to be submerged.		N/A

UL 1973			
Clause	Requirement + Test	Result - Remark	Verdict
36.3	A charging current shall be caused to flow at an increased rate (to be specified by the manufacturer) until bubbles are observed to rise from the pressure relief valve.		N/A
36.4	Results are acceptable if gas is released normally and the electrolyte containment system does not rupture or leak and the DUT's casing is not ruptured.		N/A
37	**Start-To-Discharge Test**		**N/A**
37.1	The purpose of this test is to determine the average start to discharge pressure of a resettable pressure relief valve not provided with an ASME stamp and rating.	No such components.	N/A
37.2	A calibrated pressure gauge having a range of at least 150% of the anticipated maximum working pressure of the pressure relief valve shall be installed to indicate pressures developed within the battery system during test.		N/A
37.3	To determine the start-to-discharge pressure setting of a pressure-relief valve, each of three samples of the valve shall be subjected three times to a gradually increasing air pressure. The pressure at which the valve begins to open shall be recorded. The start-to-discharge pressure setting of each sample is considered to be the average value of the three trials.		N/A
37.4	The start-to-discharge value mentioned in 37.3 is the highest average value for the three samples tested.		N/A
37.5	The start-to-discharge pressure shall be in the range of 90 – 100% of its assigned start-to-discharge pressure setting.		N/A
ENVIRONMENTAL TESTS			
38	**Thermal Cycling Test (LER Motive Applications and VAP Applications)**		**N/A**
38.1	This test determines the electrical energy storage system's ability to withstand temperature fluctuations that may be anticipated during the end-use application. This test is only applicable to LER motive applications and VAP applications.		N/A

UL 1973			
Clause	Requirement + Test	Result - Remark	Verdict
38.2	A fully charged battery system (MOSOC per 8.1) shall be placed in a test chamber and subjected to the following cycles in (a) – (e). At the conclusion of the cycling, the samples shall remain at room temperature, 25 ±5°C (77 ±9°F) for 24 h. a) Raising the chamber-temperature to 75 ±2°C (167 ±3.6°F) within 30 min and maintaining this temperature for 6 h. b) Reducing the chamber temperature to 20 ±2°C (68 ±3.6°F) within 30 min and maintaining this temperature for 2 h. c) Reducing the chamber temperature to minus 40 ±2°C (minus 40 ±3.6°F) within 30 min and maintaining this temperature for 6 h. d) Raising the chamber temperature to 20 ±2°C (68 ±3.6°F) within 30 min. e) Repeating the sequence for a further 9 cycles. *Exception No. 1: Temperatures may need to be held for longer periods for those larger systems where temperature stabilization may take longer. The time required in this case for systems that require longer exposures should be based upon the time it takes for the temperature on internal cells within the DUT to reach thermal equilibrium per 8.3 plus 1 additional hour. This time shall never be less than the exposure times noted in (a) – (d) above.* *Exception No. 2: Testing may be conducted at a subassembly level if that is representative of the energy storage system.*		N/A
38.3	If the DUT is operational after the test, it shall be subjected to a discharge and charging cycle in accordance with the manufacturer's specifications. An observation period per 8.5 is then conducted.		N/A
38.4	During the test, one of the detection methods outlined in Section 9 shall be used to detect the presence of combustible vapor concentrations. If required based upon system design or installation, venting of toxic releases shall be continuously monitored during the testing per Section 13.		N/A
38.5	At the conclusion of the observation period, the sample is then subjected to an "as received" dielectric voltage withstand test in accordance with Section 22. The DUT shall be examined for signs of rupture and evidence of leakage.		N/A

UL 1973			
Clause	Requirement + Test	Result - Remark	Verdict
38.6	As a result of the thermal cycling test, the following in (a) – (h) are considered non-compliant results. For additional information on non-complying results refer to Table 12.1. a) E – Explosion; b) F – Fire; c) C – Combustible vapor concentrations; d) V – Toxic vapor release; e) S – Electric shock hazard (dielectric breakdown); f) L – Leakage (external to enclosure of DUT); g) R – Rupture (of DUT enclosure exposing hazardous parts as determined by 7.3.3); h) P – Loss of protection controls.		N/A
39	**Resistance to Moisture Test**		**P**
39.1	The purpose of this test is to determine that the battery system can safely withstand exposure to moisture anticipated in the end use.		P
39.2	With the DUT in its normal operating orientation, it shall be subjected to a moisture resistance test based upon its IP rating in accordance with IEC 60529 or CAN/CSA-C22.2 No. 60529. The battery system shall be installed and connected as intended for this test for the end use application. For batteries located where they may be subjected to flooding conditions, the IP rating will need to minimally cover immersion. If the DUT is operational after the conditioning, it shall be subjected to a discharge and charging cycle in accordance with the manufacturer's specifications. An observation period per 8.5 is then conducted. *Exception No. 1: Enclosures with Enclosure Type Ratings as identified in NFPA 70, Article 110, or Section 2 of C22.1, are subjected to the environmental testing outlined in UL 50E/C22.2 No. 94.2, rather than the IP Code.* *Exception No. 2: Testing may be conducted at a subassembly level if that is representative of the energy storage system.*	IP65	P

UL 1973			
Clause	Requirement + Test	Result - Remark	Verdict
39.3	During the test, one of the detection methods outlined in Section 9 shall be used to detect the presence of combustible vapor concentrations if venting of cells is anticipated. If required based upon system design or installation, venting of toxic releases shall be continuously monitored during the testing per Section 13.	No venting of the cell had occurred.	P
39.4	At the conclusion of the observation period, the DUT shall be subjected to an “as received” dielectric voltage withstand test in accordance with Section 22. The DUT shall be examined for signs of rupture and evidence of leakage.	No rupture and no leakage after Dielectric Voltage Withstand Test.	P
39.5	As a result of the resistance to moisture test, the following in (a) – (h) are considered non-compliant results. For additional information on non-complying results refer to Table 12.1. a) E – Explosion; b) F – Fire; c) C – Combustible vapor concentrations; d) V – Toxic vapor release; e) S – Electric shock hazard (dielectric breakdown); f) L – Leakage (external to enclosure of DUT); g) R – Rupture (of DUT enclosure exposing hazardous parts as determined by 7.3.3); h) P – Loss of protection controls.	No non-compliant result	P
40	**Salt Fog Test**		**P**
40.1	This test determines the electrical energy storage system’s ability to safely withstand anticipated exposure to a salt fog conditions due to use near marine environments, and would apply to those stationary systems installed near sea environments whose internal components may be exposed to deterioration from salt fog through openings in the enclosure. This test would not apply to those systems not intended to be installed near marine environments as indicated in the installation instructions or whose enclosure is designed to prevent ingress of moisture with protection against corrosion (e.g. UL/NEMA 4X).		P

UL 1973			
Clause	Requirement + Test	Result - Remark	Verdict
40.2	A fully charged electrical energy storage system (MOSOC per 8.1) shall be subjected to the test method per IEC 60068-2-52, with a severity level of 1 or 2 depending upon the application and location of installation. *Exception: A sample at the subassembly level that would be representative of the battery system may be used for this test.*		P
40.3	If the DUT is operational after the conditioning, it shall be subjected to a discharge and charging cycle in accordance with the manufacturer's specifications.		P
40.4	During the cycling, one of the detection methods outlined in Section 9 shall be used to detect the presence of combustible vapor concentrations if venting of cells is anticipated. If required based upon system design or installation, venting of toxic releases shall be continuously monitored during the cycling per Section 13. An observation period per 8.5 is then conducted.		P
40.5	At the conclusion of the observation period, the DUT shall be subjected to an "as received" dielectric voltage withstand test in accordance with Section 22. The DUT shall be examined for signs of rupture and evidence of leakage.		P
40.6	As a result of the salt fog test, the following in (a) – (h) are considered non-compliant results. For additional information on non-complying results refer to Table 12.1. a) E – Explosion; b) F – Fire; c) C – Combustible vapor concentrations; d) V – Toxic vapor release; e) S – Electric shock hazard (dielectric breakdown); f) L – Leakage (external to enclosure of DUT); g) R – Rupture (of DUT enclosure exposing hazardous parts as determined by 7.3.3); h) P – Loss of protection controls.		P
41	**External Fire Exposure for Projectile Hazards Test**		**N/A**

UL 1973			
Clause	Requirement + Test	Result - Remark	Verdict
41.1	The purpose of this test is to determine that a battery system will not explode as evidenced by projectiles landing beyond the test perimeter as a result of being exposed to a hydrocarbon pool fire simulating an external fire exposure that may occur. *Exception No. 1: The battery system may be subjected to the External Fire Exposure Test in UL/ULC 2580 instead of the method outlined in 41.3.* *Exception No. 2: Testing may be conducted on a representative subassembly rather than a complete battery system if determined that equivalent results to testing a battery system can be obtained.* *Exception No. 3: If the secondary lithium cells employed in the system comply with the projectile test of* *Section E9, the system is exempted from this test. This test is not applicable to systems employing lead acid or similar monobloc aqueous electrolyte batteries.* *Exception No. 4: This test does not apply to systems intended for outdoor use only that are mounted on a non-combustible surface such as*	Projectile test evaluated at cells level according to Annex E.	N/A
41.2	This test shall be conducted in a controlled setting free from the effects of wind or other environmental factors that may affect the test. The ambient temperature during the testing is to be within the range of 0 °C to 46 °C (32 °F to 114.8 °F).		N/A
41.3	A fully charged DUT at normal operating temperature is subjected to a hydrocarbon pool fire for 20 min. The fuel used shall be heptane or similar hydrocarbon fuel.		N/A
41.4	The pan, which provides the fire containment, shall be constructed of steel of sufficient thickness to prevent warping during the course of the 20-min test. The pan shall be sized in relation to the DUT and to accommodate the fuel and water levels. The walls of the pan shall not project more than 8 cm (3.1 in) above the level of the fuel at the start of the test. The pan dimensions shall be sized to ensure that the sides of the tested-device are exposed to the flame. The pan shall exceed the horizontal projection of the DUT by 20 to 50 cm (7.9 to 19.7 in).		N/A

UL 1973			
Clause	Requirement + Test	Result - Remark	Verdict
41.5	There should be approximately 15.24 cm (6 in) of water in the pan prior to adding the hydrocarbon fuel to protect the fuel pan and to provide for consistent flame output during the test. The fuel shall be added as needed during the test to provide sufficient fuel for the test duration. The fire shall cover the whole area of the pan during whole fire exposure.		N/A
41.6	A suitable means to extinguish the fire in the fuel pan within 15 s, or remove the battery from above the fire, shall be provided. This may be accomplished by drawing a cover over the pan, or by moving the DUT from over the pan or removing the pan as putting the fire out may be difficult and should not be underestimated.		N/A
41.7	The DUT shall be fully supported and centered above the fire containment pan above the surface of the heptane. The DUT support structure shall be robust enough to withstand the weight of the DUT for the duration of the test without allowing the DUT to lean or topple. The pan shall be sized large enough to cover the dimension of the DUT, and shall be of a sufficient height so that the bottom surface of the DUT is approximately 50 cm (19.7 in) from the top fuel surface in the pan. See Figure 41.1 for details of set up.		N/A
41.8	During the test, the temperature of the cells or modules within the DUT may be monitored for information purposes.		N/A
41.9	After the 20-min fire exposure the fire shall be extinguished, and the DUT shall be subjected to a hose down in accordance with 41.10 to represent fire fighter response the system may be exposed to during a fire. At the conclusion of the hose down, there shall be a one hour observation period in accordance with 8.5.		N/A

UL 1973			
Clause	Requirement + Test	Result - Remark	Verdict
41.10	The battery shall be subjected to a low impact hose stream delivered through a 38 mm (1-1/2 in) fog nozzle set at a discharge angle of 30° with a nozzle pressure of 517 kPa (75 psi) and a minimum discharge of 4.7 L/s (75 gpm). The tip of the nozzle shall be a maximum of 1.5 m (5 ft) from the center of the exposed surface of the DUT. The minimum duration of the low impact hose stream test shall be 6.5 s/m2 (0.60 s/ft2). The outer surface of the DUT shall be identified as the exposed area, as the hose stream must traverse this area during its application. To prevent potential for exposure to projectiles, the technician conducting the hose down portion of the test shall do so behind a protective barrier.		
41.11	To determine that an explosion hazard has resulted, the DUT with pan fire test set up shall be centered within a circular inner perimeter marked on the floor with paint or a similar marking material. The marking shall be no wider than 12 mm (0.47 in) and the size of the circular inner perimeter area marking shall be no greater than 1.0 m (3.3 ft) from the outer edge of the longest side of the DUT.		
41.12	For protection from projectiles during the test, the DUT, test set up, and inner perimeter marking shall be enclosed within a protective test chamber that can contain the projectiles or within an outer perimeter consisting of a protective barrier wall of a noncombustible material such as masonry or concrete and wall thickness suitable for containing projectiles during the test. The walls of the test chamber or the outer perimeter shall be located a minimum of 1.5 m (4.95 ft) from the inner perimeter marking to prevent the possibility of projectiles bouncing off the walls and back into the inner perimeter.		
41.13	As a result of this test, there shall be no explosion of the DUT that results in projectiles falling outside of the circular inner perimeter described in 41.11. See Table 12.1 for additional details.		
42	**Single Cell Failure Design Tolerance**		**P**
42.1	General		P

UL 1973			
Clause	Requirement + Test	Result - Remark	Verdict
42.1.1	There have been field incidents with various battery technologies that have been attributed to a cell failure, which led to a hazardous event. The cell failures in these incidents were the result of either manufacturing defects or insufficient cell or battery design or a combination of both. Since there is a possibility that a cell may fail within a battery system, the battery system shall be designed to prevent a single cell failure from propagating to the extent that there is fire external to the DUT or an explosion.		P
42.1.2	The cell failure mechanism used for this testing shall reflect what is known or anticipated to occur in the field for a given technology. If the cell failure mechanism cannot be exactly replicated, a close simulation of what is known to occur in the field through the use of an external stress such as applied heating or mechanical force shall be utilized for the test. Examples of methods to simulate a single cell failure are outlined in Appendix F. Multiple tests and possible multiple failure methods may need to be conducted as part of the analysis before a final methodology for testing is determined.		P
42.2	Single cell failure design tolerance (lithium ion)		P
42.2.1	A lithium ion battery system shall be designed to mitigate a single cell failure leading to a thermal runaway of that cell. With lithium ion batteries, it is often the effects of propagation to surrounding cells due to the heating effect of the initial cell failure that leads to hazardous events. The DUT (e.g. battery pack or module) shall be designed to prevent a single cell thermal runaway failure from creating a significant hazard as evidenced by fire propagation outside of the DUT and/or an explosion.		P
42.2.2	Any number of methods can be used to produce a single cell thermal runaway failure. For example, thermal runaway in cells can be achieved through the use of heaters, nail penetration, overcharge, etc. The testing agency is responsible for selecting and demonstrating an appropriate method for inducing thermal runaway. It is recommended to evaluate a candidate method first using a small subassembly of cells to evaluate the cell failure and effects to surrounding cells. During an effort to establish a suitable failure method, temperatures should be taken on the cell casings, and voltages measured for information purposes. See Appendix F for guidance on several methods of inducing cell failure. The method chosen shall be agreed upon by the testing agency.	Heater used	P

UL 1973			
Clause	Requirement + Test	Result - Remark	Verdict
42.2.3	The details of the method used when analyzing the cell's reaction that can impact the results are to be documented. For example, if heating the cell to achieve failure: e.g. the type of heater and its dimensions, location on the cell where the heater is placed and how it is placed, maximum temperature attained including temperature ramp rate, length of time until reaction, temperatures on cell and voltage, state of charge of the cell at the beginning of the heating phase, etc. The test article shall be representative of the actual battery configuration and any modifications should not significantly impact the test results. For example, if overcharge is to be carried out, the heat conduction path between tabs shall not be hindered as that may reduce the severity of the test.		P

UL 1973			
Clause	Requirement + Test	Result - Remark	Verdict
42.2.4	Once a suitable method of cell failure has been determined, the fully charged DUT (MOSOC per 8.1) shall be subjected to the single cell failure tolerance test, which consists of inducing a fault in one internal cell that is within the DUT, until cell failure resulting in thermal runaway as defined in 6.58 occurs, and determining whether or not that failure produces a significant external hazard or whether or not that failure does not cause the failure of neighboring cells. If cascading occurs, the cascading shall not propagate beyond the DUT. Prior to choosing the specific cell to fail, an analysis of the DUT design to determine the cell location considered to have the greatest potential to lead to a significant external hazard shall be conducted, taking into consideration the cell's proximity to other cells and materials that may lead to potential for propagation. If it can impact the results, the sample shall be at the maximum specified temperature during charging and operation with some tolerance as necessary for movement of the sample outside of the chamber during testing, but within ±5°C (±9°F). Once the thermal runaway is initiated, the mechanism used to create thermal runaway is shut off or stopped and the DUT is subjected to a 24-h observation period. *Exception No. 1: Testing may be repeated on another sample with a cell in a different location within the DUT if it is not clear which location represents the worst case scenario. The location of the failed cell shall be documented for each test.* *Exception No. 2: Testing may be conducted on a representative subassembly consisting of one or more modules and surrounding representative environment, if it can be demonstrated that there is no propagation beyond the subassembly. When testing at the module or subassembly level, consideration needs to be made of the vulnerability to combustion of those components surrounding the module in the final assembly. Temperatures on DUT external surfaces and surfaces of parts in contact with or near the DUT in the final assembly, shall be monitored to determine if excessive temperature on these adjacent parts could result in a potential for propagation within the full battery system. If there are excessive temperatures on the surfaces that may lead to potential for propagation, testing shall be repeated with all adjacent components in place of a complete battery system.*		P

UL 1973			
Clause	Requirement + Test	Result - Remark	Verdict
42.2.5	Temperatures on the failed cell and surrounding cells are to be monitored and reported for information purposes.		P
42.2.6	As a result of the testing of 42.2, there shall be no fire propagating from the DUT or explosion of the DUT.		P
42.3	Single cell failure design tolerance (other technologies)	Lithium-ion cell.	N/A
42.3.1	Other technologies such as lithium metal, sodium sulfur, sodium nickel chloride, and lead acid where there may not be enough field data regarding their tolerance to single cell failure events, are to be subjected to a single cell failure test method similar to 42.2, except as modified as noted below. The failure mechanism for these technologies may be different than that of lithium ion and thermal runaway may or may not result from the cell failure. Similar to lithium ion, when choosing a cell failure technique, it should be representative of what can occur in the field for the particular technology. The failure mechanism chosen shall consider failures due to potential cell manufacturing defects for that technology and/or cell and battery design deficiencies that could lead to latent failures of the cell, and that would not be evident under the individual cell safety testing.		N/A
42.3.2	For other technologies, similarly as with lithium ion, it is recommended to evaluate a candidate method first using a small subassembly of cells to evaluate the cell failure and effects to surrounding cells. During an effort to establish a suitable failure method, temperatures should be taken on the cell casings, and voltages measured for information purposes. See Appendix F for guidance on several methods of inducing cell failure. The method chosen shall be agreed upon by the testing agency.		N/A

UL 1973			
Clause	Requirement + Test	Result - Remark	Verdict
42.3.3	When a suitable worse case representative method for cell failure has been determined, the DUT is to be subjected to the internal cell failure occurring in the location within the DUT considered most vulnerable to the potential for propagation. The DUT shall be in a condition that reflects its operating parameters at the worst moment such a failure could occur. For example, the DUT shall be at its nominal operating temperature. During the test, temperatures shall be monitored in critical locations such as adjoining cells during the test to record the rise in temperature due to the internal failure. If no thermal runaway occurs as a result of the single cell failure, the test is stopped when the DUT temperature has stabilized or reaches ambient room temperature, and the DUT is subjected to a 24-h observation period. If a thermal runaway is initiated, the mechanism used to create thermal runaway is shut off or stopped and the DUT is subjected to a 24-h observation period. *Exception No. 1: Testing may be repeated on another sample with a cell in a different location within the DUT if it is not clear which location tested represented the worst case scenario. The location of the failed cell is to be documented for each test.* *Exception No. 2: Testing may be conducted on a representative subassembly consisting of one or more modules and surrounding representative environment, if it can be demonstrated that there is no propagation beyond the subassembly. When testing at the module or subassembly level, consideration needs to be made of the vulnerability to combustion of those components surrounding the modules in the final assembly.*		N/A
42.3.4	As a result of the testing per 42.3.3, there shall be no fire propagating from the DUT or explosion of the DUT.		N/A
42.3.5	Temperatures on the failed cell and surrounding cells, external enclosure surfaces of the DUT and the supporting surface are to be monitored and reported for information purposes. The number of cells that fail due to propagation from the triggering cell shall be documented.		N/A
MANUFACTURING AND PRODUCTION LINE TESTS			
43	**General**		**P**

UL 1973			
Clause	Requirement + Test	Result - Remark	Verdict
43.1	Manufacturers of battery systems shall have documented production process controls in place that continually monitor the following key elements of the manufacturing process that can affect safety, and shall include corrective/preventative action to address defects found affecting these key elements: a) Supply chain control; and b) Assembly processes.		P
43.2	Battery systems shall be subjected to 100 % production screening to determine that any active controls utilized for safety are functioning. *Exception: This check of the safety controls can be conducted on subassemblies or components of the system before final assembly.*		P
43.3	An "as received" dielectric voltage withstand test as outlined in the Dielectric Voltage Withstand Test, Section 22 shall be conducted on 100 % production of Assemblies/packs with circuits exceeding 60 Vdc or 42.4 V peak as outlined in Section 22. *Exception: The time for the test may be reduced to 1 s if the test voltage values are increase by 2.4 times the values in Section 22 or as outlined in the routine test criteria of the Electric Strength Test of UL 62368-1/CSA C22.2 No. 62368-1, Clause 5.4.9.*		P
43.4	A continuity check of the grounding system using a milliohmmeter or other method, shall be conducted on 100 % production employing protective grounding. The continuity check shall determine that measurements made on any two points of the grounding system do not exceed 0.1 Ω.		P
43.5	Each resettable non-ASME coded pressure-relief valve shall be tested by the manufacturer for the start-to-discharge pressure by subjecting the pressure-relief valve to a gradually increasing air pressure until the valve begins to open. The start-to-discharge pressure shall be in the range of 90 – 100 % of its rated start-to-discharge pressure rating.		P
MARKINGS			
44	**General**		**P**

UL 1973			
Clause	Requirement + Test	Result - Remark	Verdict
	Advisory Note: In Canada, there are two official languages. Therefore, it is necessary to have CAUTION, WARNING, and DANGER instructions and markings in both English and French. Annex G lists acceptable French translations of the CAUTION, WARNING, and DANGER instructions and markings specified in this Standard. When a product is not intended for use in Canada, instructions and markings may be provided in English only.	Complied	P
44.1	Required markings shall be permanent. Examples of permanent marking are ink stamping, engraving and if adhesive labels, compliance to UL 969 or CSA C22.2 No. 0.15 for the surface adhered and conditions of use. Markings required by this standard including nameplate markings per 44.2 and any cautionary markings shall be legible, provided in text color that contrasts with the background color and visible upon installation of the battery system.	Approved adhesive labels.	P
44.2	Batteries shall be marked with the manufacturer's name, trade name, trademark or other descriptive marking which may identify the organization responsible for the product, part number or Model number, and electrical ratings in volts dc and capacity in Ampere-hours or Watt-hours and chemistry. The battery system terminals shall be marked to indicate whether they are positive (+) or negative (-). The battery shall also be marked with its IP rating.		P
44.3	Batteries and Battery systems using repurposed batteries in accordance with 7.13, shall be marked "Repurposed" or "Second Life" and "UL 1974".	No repurposed batteries used.	N/A
44.4	Battery systems shall be marked with the maximum short circuit current and duration (at maximum short circuit current) at the system output terminals.	Marked on the battery system label.	P
44.5	Battery systems shall also be marked with the date of manufacture, which may be in the form of a code that does not repeat within 20 years.		P
44.6	A battery system intended for use with specific chargers shall be marked with the following or equivalent: "Use Only ( ) Charger".		N/A
44.7	A battery system evaluated for protection against ingress of moisture per 7.3.5, shall be provided with the appropriate IP Code rating.	IP65	P

UL 1973			
Clause	Requirement + Test	Result - Remark	Verdict
44.8	Systems shall be marked with a cautionary marking indicating to read all instructions before installation, operation and maintenance of the system. This marking may be in the form of the symbol(s) for example: ISO 7000, “caution” Symbol No. 434 (exclamation point inside triangle) followed by the “read instruction manual” Symbol No. 790 (open book). If using symbols, their meaning shall be explained in the instruction manual.	Symbol used.	P
44.9	Systems that must be operated in a certain orientation for safe operation, shall be provided with markings indicating the correction orientation of the system.		N/A
44.10	Systems shall be marked with a warning marking indicating risk of electrocution near hazardous voltage battery terminals.		P
44.11	Systems with replaceable fuses, shall be marked with rating and type of fuse for replacement. The marking shall be located near the fuseholder.		N/A
44.12	Separable accessories and controls which are intended for connection to the mains supply shall be provided with markings that include the manufacturer’s name, part number of the accessory and electrical ratings in voltage, frequency, phase if applicable, and current or watts.		P
44.13	A ground terminal shall be marked as outlined in 7.6.8.		P
44.14	Additional warning markings for battery systems located in restricted access locations such as warnings regarding hazardous moving or electrical parts, hot surfaces, etc., to alert service or other trained personnel and prevent hazards, shall be provided on the battery systems in locations where they will be visible those persons having access to the location.	Rely on final system, See user manual and installation instruction.	N/A

UL 1973			
Clause	Requirement + Test	Result - Remark	Verdict
44.15	With reference to 7.12.2, a secondary lithium cell shall be legibly and permanently marked with: a) The manufacturer's name, trade name, or trademark or other descriptive marking by which the organization responsible for the product may be identified; b) A distinctive catalog, model or designation number or the equivalent; and c) The date or other dating period of manufacture not exceeding any three consecutive months. *Exception No. 1: The manufacturer's identification may be in a traceable code if the product is identified by the brand or trademark owned by a private labeler.* *Exception No. 2: The date of manufacture may be abbreviated; or may be in a nationally accepted conventional code or in a code affirmed by the manufacturer, provided that the code:* a) Does not repeat in less than 10 years; and b) Does not require reference to the production records of the manufacturer to determine when the product was manufactured.	Battey system	N/A
44.16	With reference to 44.15, if a manufacturer produces a cell at more than one factory, each cell shall have a distinctive marking to identify it as the product of a particular factory.	Battey system	N/A

UL 1973			
Clause	Requirement + Test	Result - Remark	Verdict
44.17	Required markings for single cells and multi-cell/monobloc vented and valve regulated lead acid and nickel cadmium batteries shall be legibly and permanently marked in accordance with 44.1 with the following included: a) The manufacturer's name, trade name or trademark, model designation, and month and year of manufacture; *Exception: The date of manufacture may be in the form of a code that does not repeat in 10 years.* b) The statement "Warning: Risk of fire, explosion, or burns. Do not disassemble, heat above XX °C (or °F), or incinerate." (Where XX is the cell or battery's maximum temperature specification.) *Exception: This statement may be included in the instructions provided with the cell or battery, rather than be marked on the battery.* c) Battery type (e.g. valve regulated lead-acid battery) and rated nominal voltage and capacity; and d) Positive and negative leads or terminals indicated by (+) and (−).		N/A
INSTRUCTIONS			
45	**General**		**P**
45.1	Components of a battery system shall be provided with a complete set of instructions for proper installation and use in a battery system. These instructions shall include normal operating specifications.		P

UL 1973			
Clause	Requirement + Test	Result - Remark	Verdict
45.2	Systems shall be provided with complete instructions for installation in the end use application. Installation instructions shall include the following along with any other instructions necessary for the safe and correct installation of the system and its accessories in the intended end use: a) Insulated tools, insulated gloves, personal protective equipment, and clothing and other measures necessary for safe installation of the battery system; b) The necessary housing requirements for protection against ingress of moisture and debris or access by persons; c) Ventilation requirements to prevent accumulation of hydrogen greater than 25 % of hydrogen LFL; d) Protective components and devices required in the end use installation such as fuses, circuit breakers, wiring, and other devices such as disconnect devices in accordance with NFPA 70 or C22.1. See 7.9.9; e) Circuit diagrams and instructions for proper connection of the system and any ancillary devices such as separate controllers, monitoring devices, etc.; f) Warnings and instructions regarding the battery electrolyte; g) Instructions regarding any commissioning tests and checks necessary before placing system into service; h) Table or list, etc. of symbols used and their meanings; i) The necessary information to complete an arc flash/blast analysis, including bolted fault current (IBF), 1/2 bolted fault current (1/2 IBF), protective device clearing time, and protective device current interrupt capability at a minimum, if applicable to the system; and j) If applicable, the manufacturer shall provide information on design considerations for maximum and minimum system configurations, such as number of modules installed in series, maximum resistance, and maximum inductance to prevent arc flash incident energy from exceeding the requirements of Personal Protective Equipment Category 4 per NFPA 70E or CSA Z462-15.		P

UL 1973			
Clause	Requirement + Test	Result - Remark	Verdict
45.3	Battery systems intended for installation in a restricted access location per 6.51 shall have installation instructions indicating this with instructions defining the type of location required, its restrictions, signage and other information to be provided.	Rely on final system.	N/A
45.4	A system shall be provided with instructions for the proper use including charging and discharging, storage, recycling and disposal. These instructions shall include temperature limits, charging and discharging limits as well as instructions regarding the use of any controls or monitoring systems.		P
45.5	A system shall include the following statements or equivalent: a) An attention word, such as "DANGER," "WARNING," or "CAUTION." b) A brief description of possible hazards. c) A list of actions to take to avoid possible hazards regarding disposal of the system such as do not crush, disassemble, dispose of in fire, or similar actions.		P
45.6	The system shall be provided with a maintenance manual that includes a schedule for maintenance of the system and accessories including a check of wiring and connections, etc. The maintenance manual shall include necessary safety precautions regarding handling or conducting maintenance on the system and its connections and accessories.		P
45.7	Cells shall be provided with a complete set of instructions that include operating region specifications for charging and discharging including current temperature range and voltages, installation instructions, storage of batteries and disposal instructions. Guidance on cell specification information that should be provided on cells can be found in the Cell Specification Sheet, Annex E of IEEE 1625.		P
45.8	The installation instructions for vented and valve regulated lead acid and nickel cadmium batteries shall indicate that the batteries and components of the battery systems shall be installed in accordance with Article 480 or 706 of NFPA 70 or Section 64 of CSA C22.1.	Lithium-ion cell	N/A

UL 1973			
Clause	Requirement + Test	Result - Remark	Verdict
45.9	Installation instructions for vented and valve regulated lead acid and nickel cadmium batteries shall indicate that the charging system for these batteries shall prevent charging outside of the battery specifications through the use of voltage (and temperature for VRLA) monitoring and controls, or both current and temperature monitoring and controls. The system may also use current monitoring to prevent out of condition specifications. The instructions shall indicate that chargers shall comply with UL 1012, UL 1741, UL 60335-2-29/CSA C22.2 No. 60335-2-29, CAN/CSA C22.2 No. 107.2, or UL 62368-1/CSA C22.2 No. 62368-1. Instructions for the battery system shall provide information on a specific charger to be used with the battery system if the charger is relied upon to maintain the battery system safety.		N/A
45.10	The instructions for vented and valve regulated lead acid and nickel cadmium batteries shall indicate that battery systems exceeding 60 Vdc shall be provided with a disconnecting means for all ungrounded conductors in accordance with Article 480 of NFPA 70 or Section 64 of CSA C22.1.		N/A
45.11	Installation instructions for single cells and multi-cell/monobloc vented and valve regulated lead acid and nickel cadmium batteries shall be provided with instructions indicating that service disconnects shall be provided as applicable to the end product battery system in accordance with Article 480 of NFPA 70 or Section 64 of CSA C22.1.		N/A
45.12	Installation instructions for vented and valve regulated lead acid and nickel cadmium multibattery/cell systems shall include the short circuit current output from the battery system rather than the marking of 44.4.		N/A
45.13	Vented lead acid or nickel cadmium cell and battery installation instructions shall indicate the need for spill control in accordance with the building, fire and installation codes.		N/A
45.14	The instructions for vented and valve regulated lead acid and nickel cadmium cells and batteries shall indicate that ventilation to address any hydrogen off gassing shall be in accordance with the local fire and installation codes.		N/A
45.15	The instructions for open rack vented and valve regulated lead acid and nickel cadmium battery systems shall indicate that these racks shall be installed in restricted access locations or be installed within a protective enclosure that prevents access in accordance with the end use application.		N/A

UL 1973			
Clause	Requirement + Test	Result - Remark	Verdict
45.16	Instructions for vented and valve regulated lead acid and nickel cadmium cells and batteries shall indicate recommended wiring for battery connections, the minimum clearance between cells and batteries on the racks and any type of protection device.		N/A
45.17	Instructions for vented and valve regulated lead acid and nickel cadmium cells and batteries shall include maintenance instructions for maintaining the cells and batteries in safe operating condition through the life of the cell and battery including electrolyte maintenance if applicable, examination of terminals and casings for damage, etc.		N/A
45.18	If lead acid and nickel cadmium cells and batteries are intended for installation in an end use that utilizes protective grounding, the installation instructions shall recommend that the grounding and bonding system be checked after the completion of the assembly to ensure that the resistance is less than or equal to 0.1 Ω.		N/A
45.19	The instructions provided with lead acid and nickel cadmium cells and batteries shall indicate the maximum voltage of the end use system they can be installed in. If the voltage in the end use is exceeded, then the instructions shall recommend a repeat of the dielectric voltage withstand test of the assembly for the higher voltage.		N/A
Appendix A Standard for Components			
A1	**Standards for Components**		**P**
A1.1	The CSA Group and UL standards listed below are used for evaluation of components and features of products covered by this standard. Components shall comply with all the applicable CSA Group and UL component standards. These standards shall be considered to refer to the latest edition and all revisions published to that edition.	See appended table Critical components.	P
Appendix B Test program for sodium-beta battery cells			
B1	**General**		**N/A**
APPENDIX C Test program for flowing electrolyte batteries			
C1	**General**		**N/A**
APPENDIX D Metal compatibility table			
D1	**General**		**N/A**
D1.1	For combinations that fall above the line in Table D.1, an evaluation on the parts can be conducted to determine suitability. Protection methods such as coatings can be used, but will need to be evaluated.		N/A

UL 1973			
Clause	Requirement + Test	Result - Remark	Verdict
D1.2	The evaluation method shall consist of a comparison of the part to evaluate with a similar part using construction that is below the line of Table D.1, after corrosion conditioning such as a salt fog conditioning in accordance with ASTM B117, ISO 9227 or similar method. Measurements of the properties of the connection parts (design under consideration as well as comparison design) under test shall be made before and after conditioning with a comparison of the results. Properties to measure will depend upon the part being evaluated, but could include resistance, temperatures on the part during operation, or bond/mechanical strength as applicable to the type of connection.		N/A
D1.3	The deterioration of the devices under evaluation shall not result in unacceptable properties (i.e. reduced performance that would result in malfunction of the connection) nor shall the deterioration be greater than that of the comparison design.		N/A
D1.4	As another approach, a coating with known properties, such as one evaluated to UL 546, along with sealing the area to prevent moisture exposure can be used to establish acceptable protection against galvanic corrosion without additional evaluation.		N/A
APPENDIX E Cell Test Program			
E1	**General**		**N/A**
E1.1	The following shall be used to evaluate lithium ion cells or other secondary lithium cells.	Certified Lithium-ion cell used with UL 1973: 2022	N/A
E1.2	Samples used for testing shall be representative of production. The number of samples used for each test and the pass/fail criteria for testing is outlined in Table E.1. As an alternate, the lithium ion cell test program outlined in Sections E10 – E11 may be used		N/A
E1.3	Prior to conditioning in E1.4, two samples from the total set of samples as representative samples shall be subjected to the capacity check per E2.2 to confirm the capacity of the samples is correct.		N/A

UL 1973			
Clause	Requirement + Test	Result - Remark	Verdict
E1.4	Prior to testing, the samples shall be conditioned by first discharging them down to the manufacturer's specified end point voltage and then charging them to the manufacturer's specified upper limit charging voltage using the manufacturer's specified maximum charging current. Samples shall be charged at the upper temperature limit of the charging operating region and the lower limit of the charging operating region for those tests as identified in Table E.1. During charging, a minimum of one temperature is measured on the surface of the cell centered on the cell. For prismatic cells, this would be on the largest flat surface.		N/A
E1.5	Some lithium cells are capable of exploding when the tests described in this Annex are conducted. It is important that personnel be protected from the flying fragments, explosive force, sudden release of heat, and noise that results from such explosions. The test area shall be well ventilated to protect personnel from possible harmful fumes or gases.		—
E1.6	As an additional precaution, the temperatures on the surface of the cell casings shall be monitored in accordance with E1.7 during the tests described in this Annex. All personnel involved in the testing of lithium cells shall be instructed never to approach a lithium cell while the surface temperature exceeds 90 °C (194 °F) and not to touch the lithium cell while the surface temperature exceeds 45 °C (113 °F).		—
E1.7	In accordance with E1.6, the surface temperatures of the cell casing shall be measured as follows: a) By thermocouples consisting of wires not larger than 0.21 mm2 (24 AWG) and not smaller than 0.05 mm2 (30 AWG) and a potentiometer-type instrument; and b) The temperature measurements on the cells shall be made with the measuring junction of the thermocouple held tightly against the metal casing of the cell. *Exception: Placing the thermocouple on a thin piece of paper or label is an acceptable practice.*		N/A
E1.8	For protection, the Projectile Test in E9 shall be conducted in a room separate from the observer or within an appropriate containment chamber.		—
E2	**Preconditioning and Capacity Check**		**N/A**
E2.1	Preconditioning		N/A

UL 1973			
Clause	Requirement + Test	Result - Remark	Verdict
E2.1.1	The charge/discharge cycling preconditioning in E2.1.2 shall be done before testing and conducted on secondary lithium metal (i.e. lithium metal anode) cells. Lithium ion cells need not be subjected to charge/discharge cycle preconditioning.		N/A
E2.1.2	Secondary lithium metal (i.e. lithium metal anode) cells shall be conditioned at 25 °C ±5 °C (77 °F ±9 °F). The cells shall be continuously cycled as specified by the manufacturer. The specification shall be such that the full rated capacity of the cell is utilized and the number of cycles accumulated shall be at least equal to 25 % of the advertised cycle life of the cell or cycled continuously for 90 days, whichever is shorter. Cycling shall be done either individually or in groups. Cells shall be recharged prior to testing.		N/A
E2.2	Capacity check		N/A
E2.2.1	Prior to conducting testing, the capacity of the lithium ion and lithium metal cells to be tested shall be checked in accordance with E2.2.2 – E2.2.5 by selecting two samples from the total set of samples.		N/A
E2.2.2	For secondary lithium metal (i.e. lithium metal anode) cells, this capacity check shall be conducted on preconditioned secondary lithium metal cells per E2.1. *Exception : For secondary lithium metal cells subjected to preconditioning per E2.1, the capacity check may be conducted during the preconditioning of these secondary lithium metal cells by checking the discharged capacity during the first few cycles. This capacity confirmation may be done in the manufacturer shipping inspection by checking the capacity discharge curve shipped with the samples.*		N/A
E2.2.3	The cell shall be discharged at 25 °C ±5 °C (77 °F ±9 °F) at a constant current of 0.2C rate, down to a specified end of discharge voltage. The cell shall then be charged in a room ambient temperature, 25 °C ±5 °C (77 °F ±9 °F), at charging parameters specified by the manufacturer until fully charged. The cell shall then be allowed to stabilize at room ambient per 6.52.		N/A
E2.2.4	With the cell in the fully charged condition, the cell shall be discharged at a constant current discharge in accordance with the cell manufacturer's specifications down to the end of discharge voltage. The duration of the discharge shall be monitored and the measured capacity of the cell shall be calculated to three significant figures.		N/A

UL 1973			
Clause	Requirement + Test	Result - Remark	Verdict
E2.2.5	For cells to be used for the test program outlined in this Annex, their measured capacity shall equal or exceed the rated specifications. All samples shall be subjected to the capacity check test if any representative sample does not meet this criteria. The cells not meeting this criteria shall be excluded from testing.		N/A
E3	**Short Circuit**		**N/A**
	Fully charged, conditioned cells are stored in an ambient temperature of 25 °C ±5 °C (77 °F ±9 °F) until their casing reaches ambient temperature, and then subjected to a short circuit condition using an external resistance of ≤ 20 mΩ. The external resistance shall be applied to the cell terminals for 7 h or until temperatures on the cell cool to within ±10 °C (18 °F) of ambient conditions.		N/A
	Compliance criteria: No fire, no explosion.		N/A
E4	**Cell Impact**		**N/A**
	Fully charged, conditioned cells shall be subjected to an impact test as outlined in E11.4. The cells shall be at an ambient temperature of 25 °C ±5 °C (77 °F ±9 °F) prior to testing.		N/A
	Compliance criteria: No fire, no explosion.		N/A
E5	**Drop Impact**		**N/A**
	Fully charged cells shall be dropped three times from a height of 1 m (3.3 ft) onto a flat concrete or metal surface. The cells shall be at an ambient temperature of 25 °C ±5 °C (77 °F ±9 °F) prior to testing.		N/A
	The cells shall be dropped in a manner that the impacts occur in random orientations. After completion of the impacts, the cells shall be subjected to a minimum one hour observation period before being examined.		N/A
	Compliance criteria: No fire, no explosion.		N/A
E6	**Heating**		**N/A**
	Fully charged, conditioned cells shall be subjected to a heating test as outlined in E11.7.		N/A
	Compliance criteria: No fire, no explosion.		N/A
E7	**Overcharge**		**N/A**

UL 1973			
Clause	Requirement + Test	Result - Remark	Verdict
	Fully charged conditioned cells shall be discharged in accordance to manufacturer's specifications down to the specified end point voltage. The test is conducted in an ambient of 25 °C ±5 °C (77 °F ±9 °F) and with the cell casing at an ambient of 25 °C ±5 °C (77 °F ±9 °F) at the start of the test. The voltage and temperature of the cell shall be monitored during the test. The cells are charged with a constant current at the maximum specified charge current until the voltage of the cell reaches 120 % of the maximum specified charge voltage value or 130 % State of Charge (SOC), whichever is reached first. The charge is then terminated while the cell temperature continues to be monitored. The test is concluded when the cell temperature drops and returns to ±10 °C (18 °F) of the test ambient.		N/A
	Compliance criteria: No fire, no explosion.		N/A
E8	**Forced Discharge**		**N/A**
	Fully charged cells shall be discharged in accordance to manufacturer's specifications down to the specified end point voltage. The test is conducted in an ambient of 25 °C ±5 °C (77 °F ±9 °F). The discharged cells are subjected to a forced discharge at a constant current 1.0 It A for 90 min with the discharge voltage limit not to exceed the numerical value of the upper limit charging voltage specified for the cell. If the discharge voltage limit is reached before the 90 min, the cell shall be discharged at a constant voltage discharge equal to the manufacturer’s determined low voltage cutoff, with the current decreasing as necessary until the 90 min time period is reached.		N/A
	Compliance criteria: No fire, no explosion.		N/A
E9	**Projectile**		**N/A**
	Two fully charged cells shall be subjected to the projectile test criteria as outlined in E11.10.		—
	As a result of the projectile test, the cells there shall not be an explosion of the cells resulting in projectiles with sufficient force to penetrate the test cage screen.		N/A
ALTERNATIVE TEST PROGRAM FOR SECONDARY LITHIUM CELLS			
E10	**General**		**N/A**

UL 1973			
Clause	Requirement + Test	Result - Remark	Verdict
E10.1	This cell test program may be used to evaluate secondary lithium cells for use in battery systems that comply with this standard instead of the test program outlined in Sections E1 – E9. Samples used for testing shall be representative of production. The number of samples used for each test and the pass/fail criteria for testing shall be as outlined in Table E.2.		N/A
E10.2	Some lithium cells are capable of exploding when the tests described below are conducted. It is important that personnel be protected from the flying fragments, explosive force, sudden release of heat, and noise that results from such explosions. The test area shall be well ventilated to protect personnel from possible harmful fumes or gases.		—
E10.3	As an additional precaution, the temperatures on the surface of the cell casings shall be monitored in accordance with E10.4 during the tests described below. All personnel involved in the testing of lithium cells shall be instructed never to approach a lithium cell while the surface temperature exceeds 90 °C (194 °F) and not to touch the lithium cell while the surface temperature exceeds 45 °C (113 °F).		—
E10.4	In accordance with E10.3, the surface temperatures of the cell casing shall be measured as follows: a) By thermocouples consisting of wires not larger than 0.21 mm2 (24 AWG) and not smaller than 0.05 mm2 (30 AWG) and a potentiometer-type instrument; and b) With the measuring junction of the thermocouple held tightly against the metal casing of the cell. *Exception: Placing the thermocouple on a thin piece of paper or label is an acceptable practice.*		—
E10.5	For protection, the Projectile Test in E11.10 shall be conducted in a room separate from the observer or within an appropriate containment chamber.		—
E10.6	Secondary lithium metal (i.e. lithium metal anode) cells shall be conditioned in accordance with E2.1 prior to the testing.		N/A
E10.7	The capacity of the samples for all lithium chemistries shall be confirmed in accordance with E2.2 prior to testing.		N/A
E11	**Tests**		**N/A**
E11.1	Short-circuit test		N/A

UL 1973			
Clause	Requirement + Test	Result - Remark	Verdict
	Each test cell shall be short-circuited by connecting the positive and negative terminals with a resistance load of less than or equal to 20 mΩ. The temperature of the cell case shall be recorded during the test. The short circuit shall be applied until the cell case temperature has returned to ±10 °C (±18 °F) of ambient temperature. Tests shall be conducted at 55 ±5 °C (131 ±9 °F). The samples shall reach equilibrium at 55 ±5 °C (131 ±9 °F), as applicable, before the terminals are connected.	See appended table	N/A
	Compliance criteria: No fire, no explosion.		N/A
E11.2	Overcharge test		N/A
	A cell shall be subjected to a constant current charge at the maximum specified charging current until the cell reaches 120 % of its maximum specified charge voltage limit or it reaches 130 % SOC, whichever comes first.	See appended table	N/A
	Compliance criteria: No fire, no explosion.		N/A
E11.3	Crush test		N/A
	A cell shall be subjected to a bar crush using a bar with a 15-cm (5.9-in) diameter. The force for the crushing shall be applied by a hydraulic ram or similar force mechanism. The force shall be applied until one of the following in (a) – (c) occurs. Once the maximum force has been obtained, the force shall be released. a) A voltage (OCV) drop of one-third of the original cell voltage occurs; b) A deformation of 15 % or more (in the direction of the crush) of initial cell dimension occurs; or c) A force of 1000 times the weight of cell is reached. A cylindrical, pouch or prismatic cell shall be crushed with its longitudinal axis parallel to the crushing apparatus. Each sample shall be subjected to a crushing force in only one direction and the crush shall be conducted only on the wide side of a pouch or prismatic cell. Separate samples shall be used for each test.	c)	N/A
	For other than pouch cells, the crush shall be applied in the center of the cells.	Pouch cells.	N/A

UL 1973			
Clause	Requirement + Test	Result - Remark	Verdict
	For pouch type cells, the crushing force shall be applied on the casing near where the cell tabs exit. If the positive and negative tabs are on opposite sides, the crush force shall be applied on the casing near where the negative tab exits.	See attachment photo documentation.	N/A
	Compliance criteria: No fire, no explosion.		N/A
E11.4	Impact test		N/A
	A cell shall be placed on a flat surface. A 15.8 ±0.1-mm (5/8 ±0.004-in) diameter bar shall be placed across the center of the sample. A 9.1 ±0.46-kg (20 ±1-lb) weight shall be dropped from a height of 610 ±25 mm (24 ±1 in) onto the sample. The cell shall be impacted with its longitudinal axis parallel to the flat surface and perpendicular to the longitudinal axis of the 15.8-mm (5/8-in) diameter curved surface lying across the center of the test sample. For prismatic and pouch cells, only the wide side shall be impacted. Each sample shall be subjected to only a single impact. Separate samples shall be used for each test.	Complied. Prismatic cell.	N/A
	Compliance criteria: No fire, no explosion.		N/A
E11.5	Shock test		N/A
	The cell shall be secured to the testing machine by means of a rigid mount which supports all mounting surfaces of the cell. Each cell shall be subjected to a total of three shocks of equal magnitude. The shocks shall be applied in each of three mutually perpendicular directions unless it has only two axes of symmetry in which case only two directions shall be tested. Each shock shall be applied in a direction normal to the face of the cell. For each shock, the cell shall be accelerated in such a manner that during the initial 3 ms the minimum average acceleration is 75 g (where g is the local acceleration due to gravity). The peak acceleration shall be between 125 and 175 g. Cells shall be tested at a temperature of 25 ±5 °C (77 ±9 °F).	Complied.	N/A
	Compliance criteria: No venting, no leakage, no rupture, no fire, and no explosion.		N/A
E11.6	Vibration test		N/A

UL 1973			
Clause	Requirement + Test	Result - Remark	Verdict
	A cell shall be subjected to simple harmonic motion with an amplitude of 0.8 mm (0.03 in) [1.6 mm (0.06 in) total maximum excursion]. The frequency shall be varied at the rate of 1 Hz/min between 10 and 55 Hz, and return in not less than 90 nor more than 100 min. The cell shall be tested in three mutually perpendicular directions. For a cell that has only two axes of symmetry, the cell shall be tested perpendicular to each axis. At the end of the vibration conditioning, the open circuit voltage (OCV) of the cell is measured and compared with the pre-test value.	Complied. See appended table	N/A
	Compliance criteria: No venting, no leakage, no rupture, no fire, no explosion, and no OCV change. Note: No "OCV" change would be a drop in the open circuit voltage after testing of less than 10 % of the before test value.		N/A
E11.7	Heating test		N/A
	A cell shall be heated in a gravity convection or circulating air oven with an initial temperature of 25 ±5 °C (77 ±9 °F). The temperature of the oven shall be raised at a rate of 5 ±2 °C (9 ±3.6 °F) per minute to a temperature of 130 ±2 °C (266 ±3.6 °F) and remain for 10 min. For cells specified for temperatures above 100 °C (212 °F), the conditioning temperature shall be increased from 130 ±2 °C (266 ±3.6 °F), to 30 ±2 °C (86 ±3.6 °F) above the manufacturers maximum specified temperature. *Exception: For cells whose weight is greater than 500 g (1.1 lbs), the maximum temperature of the heating test shall be held for 30 min rather than 10 min.* The sample shall return to room temperature, 25 ±5 °C (77 ±9 °F), and then be examined.		N/A
	Compliance criteria: No fire, no explosion.		N/A
E11.8	Temperature cycling test		N/A

UL 1973			
Clause	Requirement + Test	Result - Remark	Verdict
	The cells shall be placed in a test chamber and subjected to the following cycles: a) Raising the chamber-temperature to 85 ±2 °C (185 ±3.6 °F) or T_{max} + 10 °C (T_{max} is the manufacturer's maximum specified temperature) within 30 min and maintaining this temperature for 4 h; b) Reducing the chamber temperature to 25 ±5 °C (77 ±9 °F) within 30 min and maintaining this temperature for 2 h; c) Reducing the chamber temperature to minus 40 ±2 °C (minus 40 ±3.6 °F) within 30 min and maintaining this temperature for 4 h; d) Raising the chamber temperature to 25 ±5 °C (77 ±9 °F) within 30 min; e) Repeating the sequence for a further 9 cycles; and f) After the 10th cycle, storing the cells for a minimum of 24 h, at a temperature of 25 ±5 °C (77 ±9 °F) prior to examination. At the end of the cycling, the open circuit voltage (OCV) of the cell is measured and compared with the pre-test value.		N/A
	Compliance criteria: No venting, no leakage, no rupture, no fire, no explosion, and no OCV change. Note: No "OCV" change would be a drop in the open circuit voltage after testing of less than 10 % of the before test value.		N/A
E11.9	Low pressure (altitude simulation) test		N/A
	Sample cells shall be stored for 6 h at an absolute pressure of 11.6 kPa (1.68 psi) and a temperature of 25 ±5 °C (77 ±9 °F). At the end of the conditioning, the open circuit voltage (OCV) of the cell is measured and compared with the pre-test value.		N/A
	Compliance criteria: No venting, no leakage, no rupture, no fire, no explosion, and no OCV change. Note: No "OCV" change would be a drop in the open circuit voltage after testing of less than 10 % of the before test value.		N/A
E11.10	Projectile test		N/A

UL 1973			
Clause	Requirement + Test	Result - Remark	Verdict
	Each test sample cell shall be placed on a flat screen that covers a 102-mm (4-in) diameter hole in the center of a platform table. The flat screen cover shall be constructed of steel wire mesh having 20 openings per square 25.4 mm (1 in) area and a wire diameter of 0.43 mm (0.017 in). The screen shall be mounted 38 mm (1-1/2 in) above a Meker type burner. The fuel and air flow rates shall be set to provide a bright blue flame that causes the supporting screen to glow a bright red. An eight-sided covered wire cage, 610-mm (24-in) across and 305-mm (12-in) high, made from metal screening shall be placed over the test sample. See Figure E.2. The metal screening shall be constructed from 0.25-mm (0.010-in) diameter aluminum wire with 16 – 18 wires per square 25.4 mm (1 in) in each direction. *Exception No. 1: The overall dimensions of the projectile test aluminum test screen may be increased from those outlined above to accommodate large cells intended for EV applications but the flat panels of the test screen shall not exceed a distance of 305 mm (12 in) from the cell in any direction.* *Exception No. 2: The projectile test cage may be replaced by a visible circular perimeter marking on the supporting surface located 0.5 m (19.7 in) from the longest side of the cell. The marking shall be no greater than 5-mm (0.2-in) thick. The test set-up shall be located within a protective enclosure/room with noncombustible surfaces located a distance from the test perimeter marking where any projectiles that fall beyond the test perimeter marking can be safely contained.*		N/A
	The sample shall be heated and shall remain on the screen until it explodes or the cell has ignited and burned out. It is not required to secure the sample in place unless the sample is at risk of falling off the screen before the test is completed. When required, the sample shall be secured to the screen with a single wire tied around the sample.		—
	Compliance criteria: No projectile. Note: Those cells not complying with the Projectile Test of E11.10 can only be used in batteries that comply with the Thermal Exposure for Explosion Hazards Test of Section 41.		N/A
E12	**Test Samples and Results Criteria**		**N/A**
E12.1	General		N/A

UL 1973			
Clause	Requirement + Test	Result - Remark	Verdict
	The test samples and results criteria for the tests in this annex shall be in accordance with Table E.2. Test results compliance criteria are defined in E12.2	2 samples for Test E11.1 to E11.10.	N/A
E12.2	Test results compliance criteria		—
	Venting is determined by evidence of mass loss as noted in Table E.3 below. **Table E.3 Venting and Leakage Mass Loss Criteria** Mass of cell: g (oz); Maximum mass percent loss: % ≤ 1.0 (≤ 0.035) 0.5 >1.0, ≤ 5.0 (> 0.035, ≤0.176) 0.2 > 5.0 (> 0.176) 0.1	Mass of cell > 5.0 g, Mass percent of loss ≤ 0.1%	—
	Leakage is determined by evidence of visible liquid electrolyte on the external case of the cell or mass loss criteria as outlined in Table E.3.		—
	Rupture is determined by a tear in the cell case at a location other than at the designed vent.		—
	Fire is determined by evidence visible flames or of charging and burning of the cell and its contents.		—
	Explosion is determined by evidence of disassembly of the cell and its contents beyond a rupture of the case.		—
APPENDIX F Cell Failure Methods			
APPENDIX G Safety Marking Translations			

UL 1973			
Clause	Requirement + Test	Result - Remark	Verdict

	Refference	English	French	French Required in Canada.	P
	44.3	"Repurposed"	« Réutilisé »		
	44.3	“Second Life”	« deuxième vie »		
	44.3	"UL 1974"	« UL 1974 »		
	44.6	"Use Only ( ) Charger "	« Utiliser Uniquement ( ) Chargeur »		
	44.8	"caution"	« attention »		
	44.8	"read instruction man ual"	« Lire le manuel d'inst ruction »		
	44.17(b)	“Warning: Risk of fire, explosion, or burns. Do not disassemble, heat above XX °C (or °F), or incinerate." (Where XX is the cell or battery’s maximum temperature specific ation.)	« Mise en garde : Ris que d’incendie, d'expl osion ou de brûlures. Ne pas démonter, ch auffer à plus de XX ° C (ou °F) ou incinére r. » (XX correspond à la t empérature maximale que peut supporter u ne pile ou une batteri e)		
	45.5	"DANGER," "WARNI NG," or "CAUTION."	« DANGER », « AVE RTISSEMENT » ou « ATTENTION ».		
	16.1	“Corrosive fluid insid e, only maintained by the manufacturer”	« Fluide corrisif à l’int érieur, seul le fabrica nt doit s’occuper de l’ entretien »		
	16.2	“Indoor Use Only”	« Pour utilisation intér ieure seulement »		
	16.3	“No User Serviceable parts, only mechanic ally recharged or refu eled by authorized se rvice personnel”	« Aucune des pièces ne peut être réparée par l’utilisateur; recha rger mécaniquement ou ravitailler par un p ersonnel d’entretien q ualifié uniquement. »		
	17.1	“ Do not use a cell sta ck/anode metal plate if it has been droppe d, as it may result in a hazardous conditio n.”	« Ne pas utiliser un a ssemblage de cellule s ou une plaque anod e métallique s’ils ont été échappés, car un e situation dangereus e pourrait en résulter. »		

APPENDIX H Alternative Approach for Evaluating Valve Regulated or Vented Lead Acid or Nickel Cadmium Batteries			
H1	**General**		**N/A**
APPENDIX I Test Program for Mechanically Rechargeable Metal-Air Batteries			
I1	**General**		**N/A**

UL 1973			
Clause	Requirement + Test	Result - Remark	Verdict

Cl. 2.1	Table: Critical Components				P
Object/part No.	**Manufacturer/ trademark**	**Type/Model**	**Technical Data**	**Standard**	**Marks of Conformity** [1]
-	-	-	-	-	-

[1] Components shall comply with all the applicable CSA Group and UL component standards.
License available upon request.
See attachment CDF for details.

UL 1973			
Clause	Requirement + Test	Result - Remark	Verdict

Cl. 15	TABLEL: Overcharge Test			P
Sample No.	OCV of DUT before test, Vdc	Device single faulted	Test Voltage applied to DUT, V	Charging curent, A
3300N000E3270005	48.9	--	57.6*1.1=63.36	160

Max Temp Measured, °C	Max Voltage Measured of DUT in Charging, V	The tested DUT, Operational / Inoperational	Dielectric Voltage Test, Brk / No Brk	Results
44.0	57.6	Operational	No Brk	Pass

Supplementary information:

☒ Testing on the complete battery system
☐ Testing on a subassembly as representative of the battery system
☐ Others:

Results:

As a result of the overcharge test, the maximum charging voltage measured on the cells or modules shall not exceed their normal operating region. Also, the following in (a) – (h) are considered non-compliant results. For additional information on non-complying results refer to Table 12.1.

a) E – Explosion;
b) F – Fire;
c) C – Combustible vapor concentrations;
d) V – Toxic vapor release;
e) S – Electric shock hazard (dielectric breakdown);
f) L– Leakage (external to enclosure of DUT);
g) R – Rupture (of DUT enclosure exposing hazardous parts as determined by 7.3.3);
h) P – Loss of protection controls.

Remak:

No non-complaint results. No venting, leakage and rupture of the internal cell was occurred.

Cl. 16	TABLEL: High Rate Charge			P
Sample No.	OCV of DUT before test, Vdc	Device single faulted	Max Charging curent, A	Test Voltage applied to DUT, V
3300N000E3270005	51.7	--	160*1.2=192	57.6

Max Temp Measured, °C	Max Voltage Measured of DUT in Charging, V	The tested DUT, Operational / Inoperational	Dielectric Voltage Test, Brk / No Brk	Results
28.0	53.0	Operational	No Brk	Pass

Supplementary information:

☒ Testing on the complete battery system
☐ Testing on a subassembly as representative of the battery system
☐ Others:

Results:

UL 1973			
Clause	Requirement + Test	Result - Remark	Verdict

As a result of the high-rate charge, the battery protection circuit (e.g. BMS) shall detect the overcharging current and shall prevent the battery from being charged over the maximum battery charging current. The following in (a) – (h) are considered non-compliant results. For additional information on non-complying results refer to Table 12.1.

a) E – Explosion;
b) F – Fire;
c) C – Combustible vapor concentrations;
d) V – Toxic vapor release;
e) S – Electric shock hazard (dielectric breakdown);
f) L– Leakage (external to enclosure of DUT);
g) R – Rupture (of DUT enclosure exposing hazardous parts as determined by 7.3.3);
h) P – Loss of protection controls.

Remark:

No non-compliant results. No venting, leakage and rupture of the internal cell was occurred.

Cl. 17	TABLEL: Short circuit test						P
Sample No.	OCV before test, Vdc	Measured External Short Circuit Resistance, mΩ	Device single faulted	Maximum short circuit current, A	Maximum short circuit duration	Specified short circuit current, kA	Specified short circuit duration
3300N000E3270005	54.2	17.3385	-	1136	0.208ms	--	--

Max Temp. Measured, °C	Maximum drawed discharging current, A	OCV of discharged DUT after test, V	The tested DUT, Operational / Inoperational	Dielectric Voltage Test, Brk /No Brk	Results
24.6	-	0	Inoperational	No Brk	Pass

Supplementary information:

☒ Testing on the complete battery system
☐ Testing on a subassembly as representative of the battery system
☐ Others:

Results:

As a result of the Short Circuit Test, the following in (a) – (h) are considered non-compliant results. For additional information on non-complying results refer to Table 12.1.

a) E – Explosion;
b) F – Fire;
c) C – Combustible vapor concentrations;
d) V – Toxic vapor release;
e) S – Electric shock hazard (dielectric breakdown);
f) L– Leakage (external to enclosure of DUT);
g) R – Rupture (of DUT enclosure exposing hazardous parts as determined by 7.3.3);
h) P – Loss of protection controls.

Remark:

No non-compliant results. No venting, leakage and rupture of the internal cell was occurred.

UL 1973			
Clause	Requirement + Test	Result - Remark	Verdict

Cl. 18	TABLEL: Overload Under Discharge				P
Sample No.	OCV before test, Vdc	Device single faulted	Measured discharging current, A	Passive device rating, A	
3300N000E3270005	53.8	-	200	-	
Max Temp. Measured in test, °C	The minimum cell voltage, V	The tested DUT, Operational / Inoperational	Dielectric Voltage Test, Brk/No Brk	Results	
27.0	2.812	Operational	No Brk	Pass	

Supplementary information:

☒ Testing on the complete battery system
☐ Testing on a subassembly as representative of the battery system
☐ Others:

Results:

As a result of the Overdischarge Protection Test, the following in (a) – (h) are considered non-compliant results. For additional information on non-complying results refer to Table 12.1.

a) E – Explosion;
b) F – Fire;
c) C – Combustible vapor concentrations;
d) V – Toxic vapor release;
e) S – Electric shock hazard (dielectric breakdown);
f) L– Leakage (external to enclosure of DUT);
g) R – Rupture (of DUT enclosure exposing hazardous parts as determined by 7.3.3);
h) P – Loss of protection controls.

Remark:

No non-compliant results. No venting, leakage and rupture of the internal cell was occurred.

Cl. 19	TABLEL: Overdischarge Protection Test				P
Sample No.	OCV before test, Vdc	Device single faulted	Measured discharging current, A	Passive device rating, A	
3300N000E3270005	53.6	-	200	-	
Max Temp. Measured in test, °C	The minimum cell voltage, V	The tested DUT, Operational / Inoperational	Dielectric Voltage Test, Brk/No Brk	Results	
47.0	2.797	Operational	No Brk	Pass	

Supplementary information:

☒ Testing on the complete battery system
☐ Testing on a subassembly as representative of the battery system
☐ Others:

Results:

As a result of the Overdischarge Protection Test, the following in (a) – (h) are considered non-compliant results. For additional information on non-complying results refer to Table 12.1.

UL 1973			
Clause	Requirement + Test	Result - Remark	Verdict

a) E – Explosion;
b) F – Fire;
c) C – Combustible vapor concentrations;
d) V – Toxic vapor release;
e) S – Electric shock hazard (dielectric breakdown);
f) L– Leakage (external to enclosure of DUT);
g) R – Rupture (of DUT enclosure exposing hazardous parts as determined by 7.3.3);
h) P – Loss of protection controls.

Remark:

No non-compliant results. No venting, leakage and rupture of the internal cell was occurred.

Cl. 20	TABLEL: Temperature and Operating Limits Check Test				P
Sample No.	Maximum Charging Current, A	Maximum Charging Voltage, Vdc	End of Charging Current, A	Ambient Temperature, °C	
3300N000E3270005	38.1	55.8	31.6	55	
Maximum Discharging Rate, A	End of discharge voltage, Vdc	Ambient Temperature Range for discharging, °C	Charging and Discharging Cycle	Dielectric Voltage Test, Brk/No Brk	Results
38.1	45.4	55	3	No Brk	Pass

Max charging current of Cell in Cycle, A	Max Voltage of Cell in cycle, V	Max discharging current of Cell in Cycle, A	Minimum Voltage of Cell in cycle, V
38.1	3.655	33.3	2.799

Supplementary information:

☒ Testing on the complete battery system
☐ Testing on a subassembly as representative of the battery system
☐ Others:

Results

The manufacturer's specified operating limits for cells/modules (voltage, current at specified temperatures) shall not be exceeded during the charging and discharging cycles. Temperatures measured on accessible surfaces shall not exceed allowed limits. See Table 20.1 and Table 20.2 for temperature limit tables.

Additional non-compliant results during the temperature test are as noted below in (a) – (h). For additional information on non-complying results refers to Table 12.1.
a) E – Explosion;
b) F – Fire;
e) S – Electric shock hazard (dielectric breakdown);
f) L– Leakage (external to enclosure of DUT);
g) R – Rupture (of DUT enclosure exposing hazardous parts as determined by 7.3.3);
h) P – Loss of protection controls.

Remark:

No non-compliant results. No venting, leakage and rupture of the internal cell was occurred.

UL 1973			
Clause	Requirement + Test	Result - Remark	Verdict

Cl. 20	TABLEL: Temperature and Operating Limits Check Test		P
Work condition.....:	Charging and Discharging		
Ambient T_{amb} (°C) .....:	55 °C		
Max operating Temp. T_{ma} (°C) ....:	55 °C		
Measuring location	Measured Temp, T (°C) [ºC]	Max. measured Temp. correct to max. ambient [°C	Allowed T_{max}, (°C)
Battery module			
External surface	55.05	--	70
Internal surface	55.17	--	70
Screen surface	55.17	--	80
Cell 1	57.98	--	65
Cell 2	58.44	--	65
Cell 3	57.47	--	65
Cell 4	58.31	--	65
Cell 5	58.38	--	65
Internal side of handle	55.62	--	65
Plastic cover (P+)	59.19	--	85
Plastic cover (P-)	57.10	--	85
Circuit breaker	56.03	--	85
P+ busbar	57.59	--	80
B+ busbar	58.12	--	80
Wire harness	57.70	--	85
Temperature sampling Terminal	57.70	--	105
BMS board			
Terminal surface	61.34	--	105
MCU (U5)	63.20	--	85
Isolated IC (U18)	61.55	--	125
Relay (U73)	58.98	--	85
Relay (U14)	60.02	--	85
Pre-charging relay (Q45)	57.70	--	150
Fuse near PCB	57.48	--	130
Ambient	55.00	--	--

The manufacturer's specified operating limits for cells/modules (voltage, current at specified temperatures) shall not be exceeded during the charging and discharging cycles. Temperatures measured on components shall not exceed their specifications. Temperatures measured on accessible surfaces shall not exceed allowed limits.

UL 1973			
Clause	Requirement + Test	Result - Remark	Verdict

Supplementary information:

The test was conducted at ambient temperature of 55°C, Operation mode: Constant charging current: 31.4A, run the product until finishing three complete charging and discharging cycles, 30 min rest between single cycles, 16 h rest between two cycles.

Cl. 20	TABLEL: Temperature and Operating Limits Check Test				P
Sample No.	Maximum Charging Current, A	Maximum Charging Voltage, Vdc	End of Charging Current, A	Ambient Temperature, °C	
3300N000E3270005	160	57.0	160	20	
Maximum Discharging Rate, A	End of discharge voltage, Vdc	Ambient Temperature Range for discharging, °C	Charging and Discharging Cycle	Dielectric Voltage Test, Brk/No Brk	Results
200	45.7	20	3	No Brk	Pass

Max charging current of Cell in Cycle, A	Max Voltage of Cell in cycle, V	Max discharging current of Cell in Cycle, A	Minimum Voltage of Cell in cycle, V
160	3.422	200	2.881

Supplementary information:

☒ Testing on the complete battery system
☐ Testing on a subassembly as representative of the battery system
☐ Others:

Results

The manufacturer's specified operating limits for cells/modules (voltage, current at specified temperatures) shall not be exceeded during the charging and discharging cycles. Temperatures measured on accessible surfaces shall not exceed allowed limits. See Table 20.1 and Table 20.2 for temperature limit tables.

Additional non-compliant results during the temperature test are as noted below in (a) – (h). For additional information on non-complying results refers to Table 12.1.
a) E – Explosion;
b) F – Fire;
e) S – Electric shock hazard (dielectric breakdown);
f) L– Leakage (external to enclosure of DUT);
g) R – Rupture (of DUT enclosure exposing hazardous parts as determined by 7.3.3);
h) P – Loss of protection controls.

Remark:

No non-compliant results. No venting, leakage and rupture of the internal cell was occurred.

Cl. 20	TABLEL: Temperature and Operating Limits Check Test	P
Work condition.....:	Charging and Discharging	
Ambient T_{amb} (°C) .....:	20 °C	

UL 1973			
Clause	Requirement + Test	Result - Remark	Verdict

Max operating Temp. T_{ma} (°C) ....:	20 °C		
Measuring location	Measured Temp, T (°C) [ºC]	Max. measured Temp. correct to max. ambient [°C	Allowed T_{max}, (°C)
Battery module			
External surface	24.91	--	70
Internal surface	26.48	--	70
Screen surface	25.70	--	80
Cell 1	44.28	--	65
Cell 2	45.72	--	65
Cell 3	40.67	--	65
Cell 4	45.28	--	65
Cell 5	45.84	--	65
Internal side of handle	28.57	--	65
Plastic cover (P+)	61.04	--	85
Plastic cover (P-)	62.47	--	85
Circuit breaker	50.68	--	85
P+ busbar	72.74	--	80
B+ busbar	69.40	--	80
Wire harness	40.51	--	85
Temperature sampling Terminal	39.88	--	105
BMS board			
Terminal surface	47.05	--	105
MCU (U5)	57.99	--	85
Isolated IC (U18)	55.92	--	125
Relay (U73)	55.58	--	85
Relay (U14)	52.29	--	85
Pre-charging relay (Q45)	78.23	--	150
Fuse near PCB	63.31	--	130
Ambient	20.00	--	--

The manufacturer's specified operating limits for cells/modules (voltage, current at specified temperatures) shall not be exceeded during the charging and discharging cycles. Temperatures measured on components shall not exceed their specifications. Temperatures measured on accessible surfaces shall not exceed allowed limits.

Supplementary information:

The test was conducted at ambient temperature of 20°C, Operation mode: Constant charging current: 160A, run the product until finishing three complete charging and discharging cycles, 30 min rest between single cycles, 16 h rest between two cycles.

UL 1973			
Clause	Requirement + Test	Result - Remark	Verdict

Cl. 21	TABLEL: Imbalanced Charging Test				P
Sample No.	Initial OCV of 50% discharged module/~~cell~~, Vdc	OCV of the complete battery system, Vdc	Device single faulted	Measured Maximum charging current, A	Measured Maximum charging voltage, Vdc
3300N000E3270001 and 3300N000E3270002	23.091	49.7	--	160.5	55.5

Measured Maximum Voltage on 50% discharged module/~~cell~~, Vdc	Measured Maximum Temp. on 50% discharged ~~module/~~cell, °C	The tested DUT, Operational / Inoperational	Dielectric Voltage Test, Brk / No Brk	Results
25.034	45	Operational	No Brk	Pass

Supplementary information:

☒ Testing on the complete battery system
☐ Testing on a subassembly as representative of the battery system
☐ Testing on a altenate configuration as representative of the battery system
☐ Others:

Results:

As a result of the Imbalanced Charging Test, the following in (a) – (h) are considered non-compliant results. For additional information on non-complying results refer to Table 12.1.

a) E – Explosion;
b) F – Fire;
c) C – Combustible vapor concentrations;
d) V – Toxic vapor release;
e) S – Electric shock hazard (dielectric breakdown);
f) L– Leakage (external to enclosure of DUT);
g) R – Rupture (of DUT enclosure exposing hazardous parts as determined by 7.3.3);
h) P – Loss of protection controls.

Remark:

No non-compliant results. No venting, leakage and rupture of the internal cell was occurred.

Cl. 22	Table: Dielectric Voltage Withstand Test				P
Sample No.	3300N000E3270003				
Test voltage applied between:	Voltage RMS (V)	Voltage Peak (V)	Voltage shape (Surge, Impulse, AC, DC, etc.)	Test voltage (V)	Breakdown Yes / No
Battery power circuit (+) to PE (BI)	--	--	--	110Vd.c.	No
Battery power circuit (-) to PE (BI)	--	--	--	110Vd.c.	No

UL 1973			
Clause	Requirement + Test	Result - Remark	Verdict

Battery power circuit (+) to communication circuit (RI)	--	--	--	220Vd.c.	No
Battery power circuit (-) to communication circuit (RI)	--	--	--	220Vd.c.	No

Supplementary information:

1) BI = Basic Insulation, RI = Reinforced Insulation, DI = Double Insulation.

Results:

As a result of the Dielectric Voltage Withstand Test, the following (e) are considered non-compliant results. For additional information on non-complying results refer to Table 12.1.

e) S – Electric shock hazard (dielectric breakdown);

Remark:

No non-compliant results. No venting, leakage and rupture of the internal cell was occurred.

Cl. 23	**Table: Continuity Test**				**P**
Sample No.	3300N000E3270003				
Part	Tested current [A]	Tested voltage [V]	Measured Resistance [mΩ]	Result	
Grounding point to battery pack metal enclosure	--	--	22	≤ 0.1Ω	
Grounding point to BMS metal enclosure	--	--	28	≤ 0.1Ω	

Supplementary information:

As a result of continuity test, the grounding system of an battery system shall have no more than 0.1Ω resistance between any two parts of the system.

Remark:

The resistance was measured between two points on the bonding connections using a milliohmmeter, because the construction of the protective grounding and bonding system adheres to the construction methods outlined in 7.6.5 – 7.6.7.

Cl. 42	**TABLEL: Single Cell Failure Design Tolerance**					**P**
Sample No.	Initial OCV, V	Location of Failed Cell	Max Temp Measured on Failed cell, °C	Maximum Temp on Adjacent Cells °C	Maximum Temp on DUT enclosure, °C	Results
3300N000E3270004	54.34	Mid cell of the pack	692.0	212.1	115.0	1
Result Key						
Supplementary information:						

UL 1973			
Clause	Requirement + Test	Result - Remark	Verdict

External heater used to create a thermal runaway.

Results:

As a result of the testing of single cell failure design tolerance, there shall be no fire propagating from the DUT or explosion of the DUT.

1 – Thermal runaway did occur but fire did not propagate outside of the DUT and it did not explode.

2 – Thermal runaway did not occur, there was no explosion or fire outside of the DUT.

3 – Thermal runaway occurred and fire propagated outside of the DUT.

4 – Thermal runaway occurred and the sample exploded.

5 - Other

Remark:

No non-compliant results. Thermal runaway occured to the adjacent cell, there was no explosion or fire outside of the DUT.

E2.2	**TABLEL: Capacity check**				**N/A**
Sample No.	OCV before Capacity check discharging, V	Discharging current, A	Discharged duration, h	Measured capacity, Ah	Results

(1) Measured capacity equal or exceed the rated specifications.

(2) Measured capacity less than the rated specifications.

(3) Others (explain)

Remark:

E3 / E11.1	**TABLEL: Short-Circuit Test**				**N/A**
Sample No.	Ambient Temp. °C	Initial OCV, V	Total load resistance of circuit, mΩ	Maximum Temperature of Cell Case, °C	Results

Result:

(1) Sample remained intact (i.e. did not vent, Leakage, Rupture, catch on fire or explode)

(2) Sample bulged

(3) Sample vented

(4) Leakage

(5) Rupture

(6) Sample caught on fire

UL 1973			
Clause	Requirement + Test	Result - Remark	Verdict

(7) Sample exploded (8) Sample smoldered without flame (9) Other (explain)
Remark:

E4 / E11.4	TABLEL: Cell Impact			N/A
Sample No.	OCV of cell before test, V	Impact from height, m	Maximum Temperature on Cell Casing, °C	Results

Result:

(1) Sample remained intact (i.e. did not vent, Leakage, Rupture, catch on fire or explode)

(2) Sample bulged

(3) Sample vented

(4) Leakage

(5) Rupture

(6) Sample caught on fire

(7) Sample exploded

(8) Sample smoldered without flame

(9) Other (explain)

Remark:

E7 / E11.2	TABLEL: Overcharge test					N/A
Sample No.	OCV of Cell before Test, V	Max Charging current, A	Total Charging duration, h	Maximum charging Voltage in Test, V	Maximum Temp. of Cell in Test, ºC	Results

Result:

(1) Sample remained intact (i.e. did not vent, Leakage, Rupture, catch on fire or explode)

(2) Sample bulged

(3) Sample vented

(4) Leakage

(5) Rupture

UL 1973			
Clause	Requirement + Test	Result - Remark	Verdict

(6) Sample caught on fire

(7) Sample exploded

(8) Sample smoldered without flame

(9) Other (explain)

Remark:

E8	TABLEL: Forced Discharge				N/A
Sample No.	OCV before applying reverse charging, V	Target Voltage , V	Measured Reverse Charge Current It, A	Total Time for Reversed Charge Application, min	Results

Result:

(1) Sample remained intact (i.e. did not vent, Leakage, Rupture, catch on fire or explode)

(2) Sample bulged

(3) Sample vented

(4) Leakage

(5) Rupture

(6) Sample caught on fire

(7) Sample exploded

(8) Sample smoldered without flame

(9) Other (explain)

Remark:

E9 / E11.10	TABLEL: Projectile test		N/A
Sample No.	OCV before test, V	OCV after test, V	Results

Result:

(1) Cell did not explode.

(2) Cell exploded but no part of the cell casing penetrated the wire screen.

(3) Cell exploded such that particles from the casing penetrated the wire screen.

(4) Cell vented without exploding.

(5) Cell caught on fire without explosion

(6) Other.

UL 1973			
Clause	Requirement + Test	Result - Remark	Verdict

Remark:

E11.3	TABLEL: Crush test			N/A
Sample No.	OCV before test, V	Thickness before test, mm	Weight, kg	
Pressure applied, kN	OCV after test, V	Thickness after test, mm	Results	

Result:

(1) Sample remained intact (i.e. did not vent, Leakage, Rupture, catch on fire or explode)

(2) Sample bulged

(3) Sample vented

(4) Leakage

(5) Rupture

(6) Sample caught on fire

(7) Sample exploded

(8) Sample smoldered without flame

(9) Other (explain)

Remark:

E11.5	TABLEL: Shock test				N/A
Sample No.	OCV before test, V	Mass before test, kg	OCV after test, V	Mass after test, kg	Results

Result:

(1) Sample remained intact (i.e. did not vent, Leakage, Rupture, catch on fire or explode)

(2) Sample bulged

(3) Sample vented

(4) Leakage

(5) Rupture

(6) Sample caught on fire

(7) Sample exploded

(8) Sample smoldered without flame

UL 1973			
Clause	Requirement + Test	Result - Remark	Verdict

(9) OCV changed (a drop in the open circuit voltage after testing of more than 10% of the before test value) (10) Other (explain)
Remark:

E11.6	TABLEL: Vibration test				N/A
Sample No.	OCV before test, V	Mass before test, kg	OCV after test, V	Mass after test, kg	Results

Result:

(1) Sample remained intact (i.e. did not vent, Leakage, Rupture, catch on fire or explode)

(2) Sample bulged

(3) Sample vented

(4) Leakage

(5) Rupture

(6) Sample caught on fire

(7) Sample exploded

(8) Sample smoldered without flame

(9) OCV changed (a drop in the open circuit voltage after testing of more than 10% of the before test value)

(10) Other (explain)

Remark:

E11.8	TABLEL: Temperature cycling test				N/A
Sample No.	OCV before test, V	Mass before test, kg	OCV after test, V	Mass after test, kg	Results

Result:

(1) Sample remained intact (i.e. did not vent, Leakage, Rupture, catch on fire or explode)

(2) Sample bulged

(3) Sample vented

(4) Leakage

(5) Rupture

(6) Sample caught on fire

UL 1973			
Clause	Requirement + Test	Result - Remark	Verdict

(7) Sample exploded

(8) Sample smoldered without flame

(9) OCV changed (a drop in the open circuit voltage after testing of more than 10% of the before test value)

(10) Other (explain)

Remark:

E11.9	TABLEL: Low pressure (altitude simulation) test				N/A
Sample No.	OCV before test, V	Mass before test, kg	OCV after test, V	Mass after test, kg	Results

Result:

(1) Sample remained intact (i.e. did not vent, Leakage, Rupture, catch on fire or explode)

(2) Sample bulged

(3) Sample vented

(4) Leakage

(5) Rupture

(6) Sample caught on fire

(7) Sample exploded

(8) Sample smoldered without flame

(9) OCV changed (a drop in the open circuit voltage after testing of more than 10% of the before test value)

(10) Other (explain)

Remark:

--The end of test report--

P H O T O D O C U M E N T A T I O N

CN26W9UU 001 attachment 1

for

Rechargeable Li-ion Battery System

SE-F16 Max-6

NINGBO DEYE ESS TECHNOLOGY CO., LTD.

This documentation consists of 7 pages (excluding this cover page)

Top view

Front view

Back view

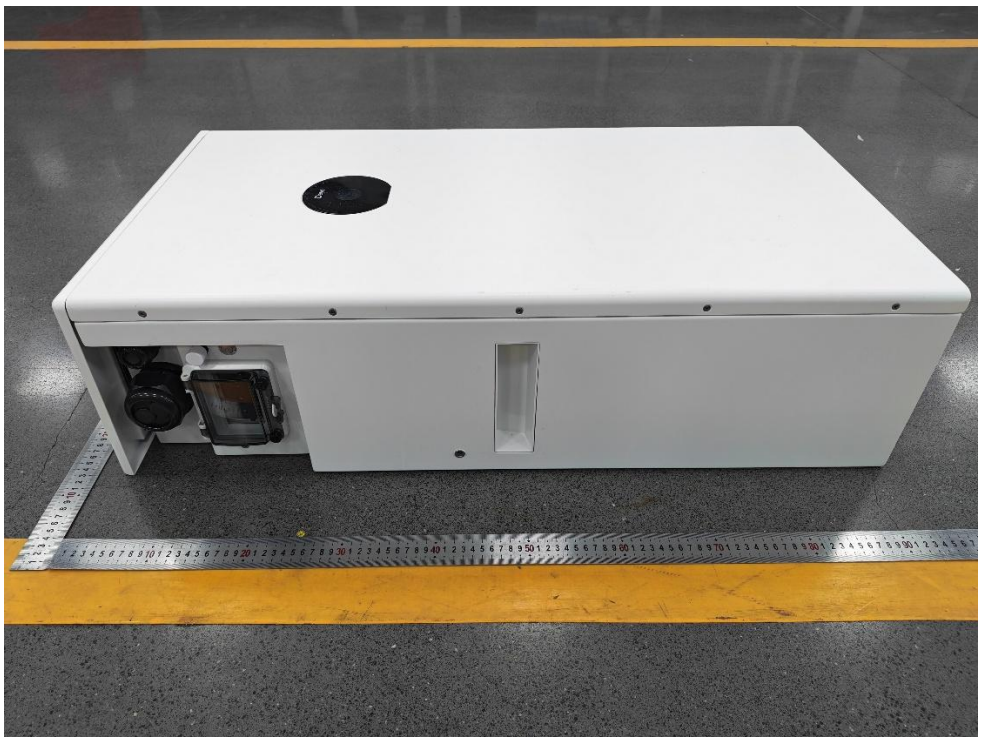

Left view for AU version

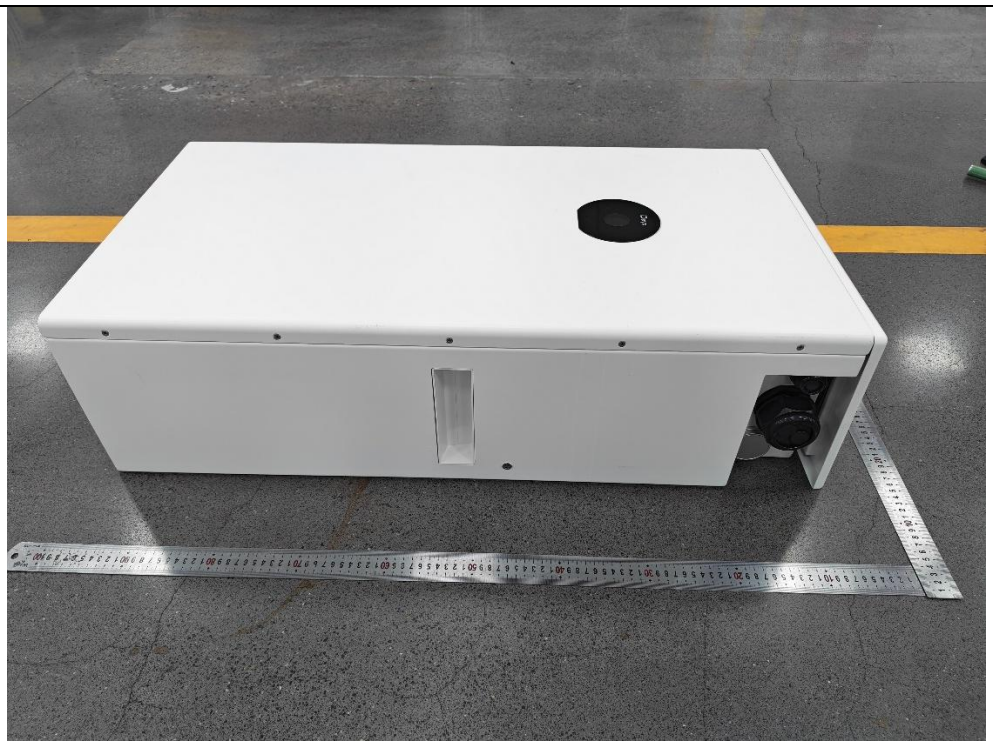

Right view for AU version

External view of blanking plug for AU version

Left view for US version

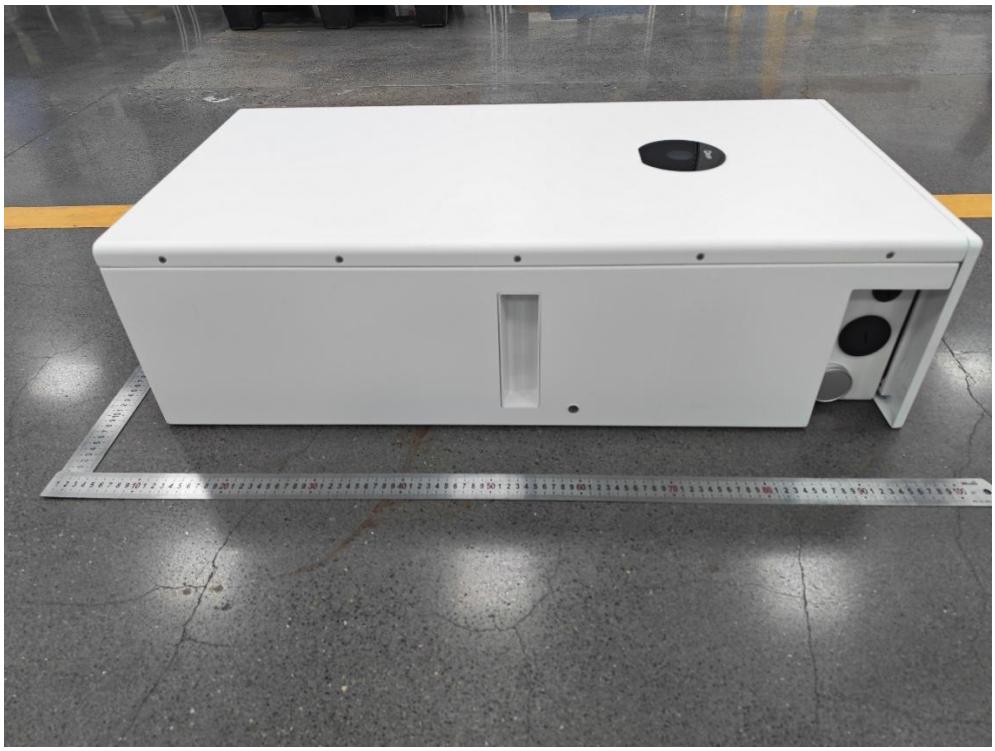

Right view for US version

External view of blanking plug for US version

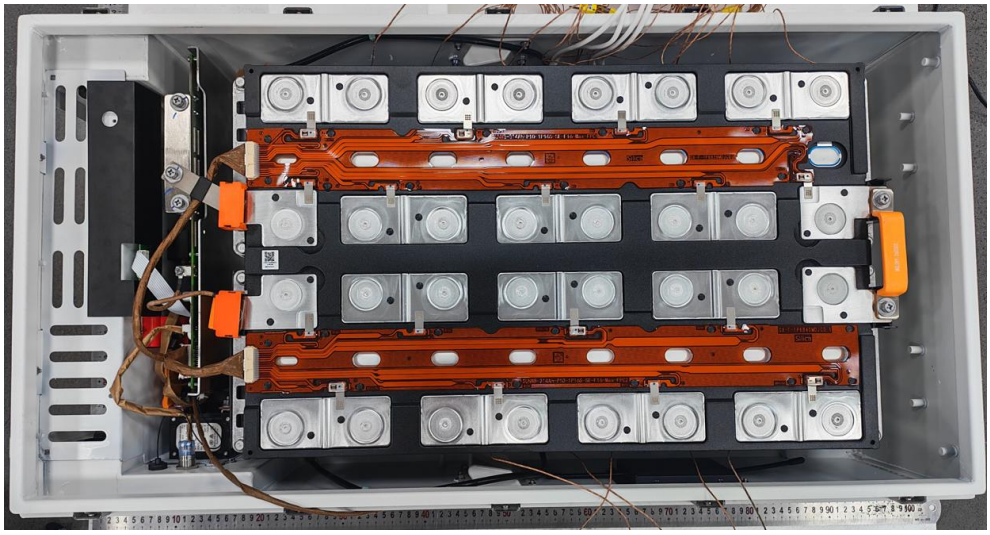

Internal view

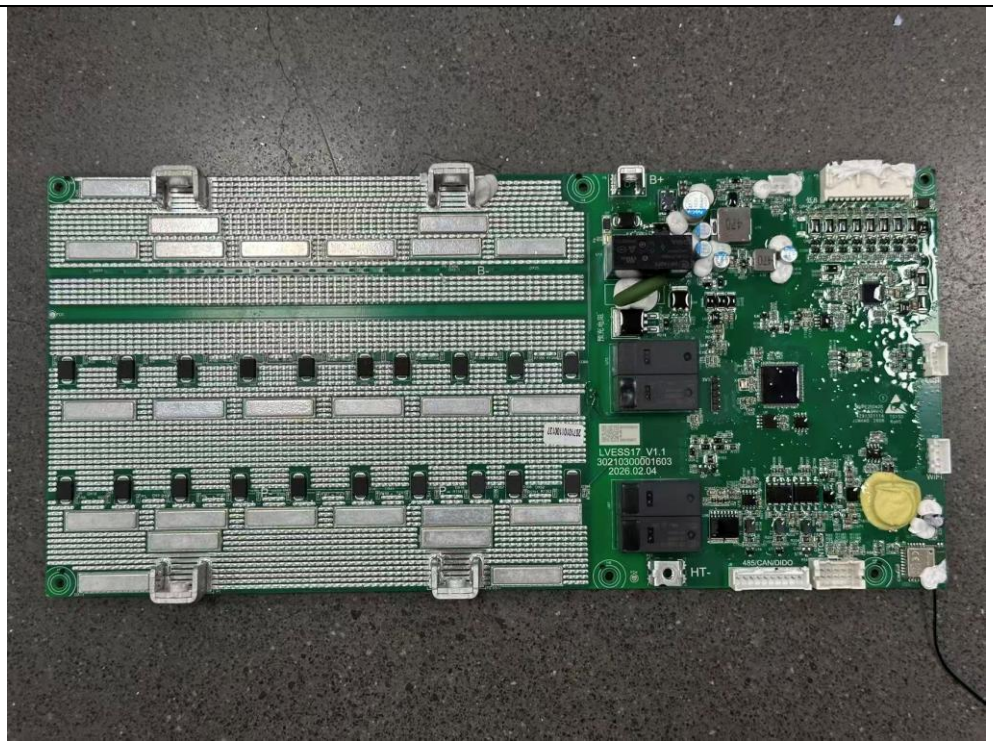

Top view of BMS board

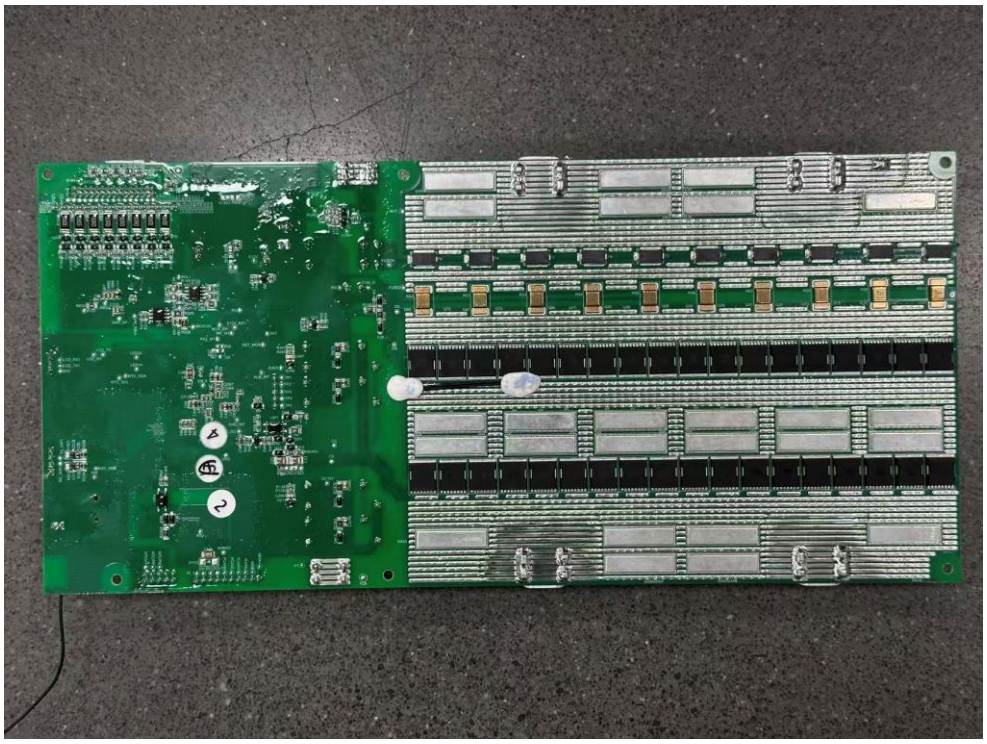

Back view of BMS board

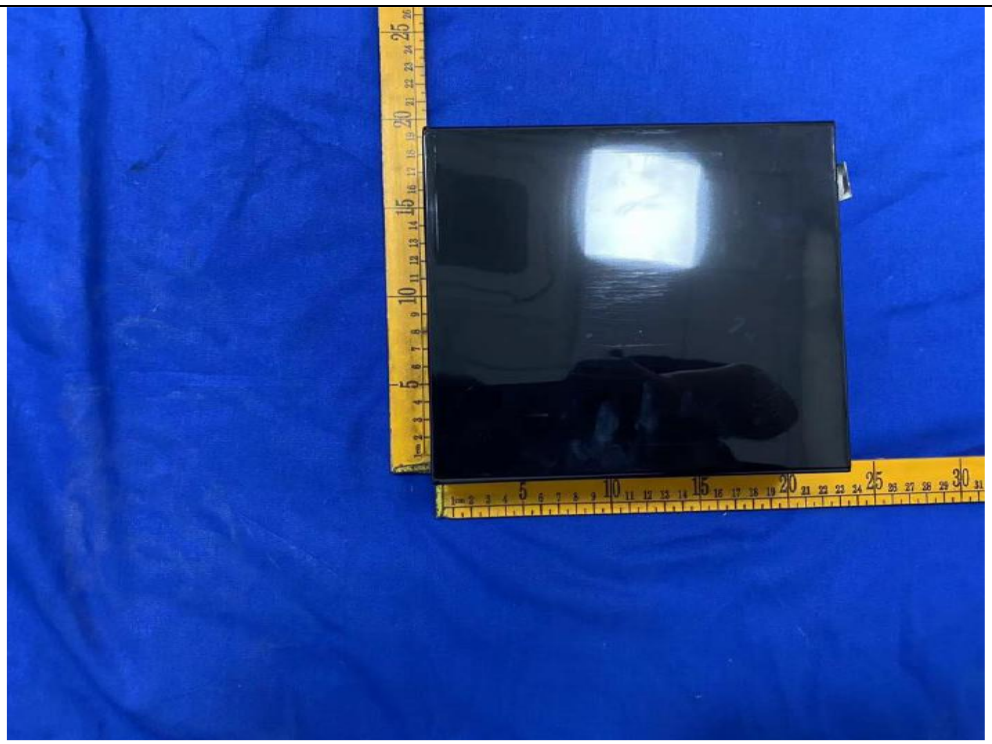

Cell view

--The end of photo documentation--